www.apc.com

InfraStruXure Label Kit

Guide for labeling the InfraStruXure PDU, Symmetra PX UPS, XR Battery Enclosure, Rack PDUs, and equipment racks

The InfraStruXure Label Kit allows you to clearly and quickly identify the following:

- The PDU breaker(s) feeding power to each of the equipment racks
- Equipment rack numbers
- Zone numbers for rows of equipment racks
- The PDU, UPS, and XR Battery Enclosures for each zone
- Which power source, if dual-fed, is feeding each Rack PDU
- Which PDU, UPS, and XR Battery Enclosure is feeding each side of a dual-fed system

Labels included in kit

R7

Breaker Label: Equipment rack number for single-pole breaker on an InfraStruXure PDU

R3

Rack Number Label: Equipment rack number

Rack 7

Breaker Label: Equipment rack number for a triple-pole breaker or for three single-pole breakers on an InfraStruXure PDU

Z1

Zone Number Label: Zone number for power equipment (PDU, UPS, XR Battery Enclosure) and equipment racks

Rack 7

Breaker Label: Equipment rack number for single-pole breakers on an 20kW InfraStruXure System

A

Power Source Label: Power source for dual-fed power equipment (PDU, UPS, XR Battery Enclosure) and Rack PDUs

THIS IS A HOT AISLE

To ,maximize the availability of the IT equipment this aisle is intentionally hot. The arrangement of the racks and the use of blanking panels prevent the equipment exhaust air from returning to the equipment air intakes. This decreases equipment operating temperature, increases equipment life, and saves energy.

Hot Aisle Label: Distinguisher for a "hot" aisle, or an aisle where hot air is expelled from equipment on both sides of the aisle

How to use the labels

Determine the layout

The diagram below shows two zones with dual-fed InfraStruXure systems. Each component has a Zone Number Label. The power equipment has Power Source Labels, and the equipment racks (shown in gray) have Rack Number Labels.

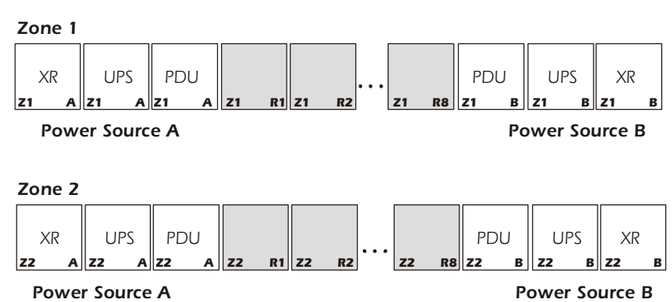

Label the zones

Label equipment racks and power equipment (PDU, UPS, XR Battery Enclosure) with the appropriate Zone Number Label. There are 48 Zone Number Labels included for each zone (Z1–Z4).

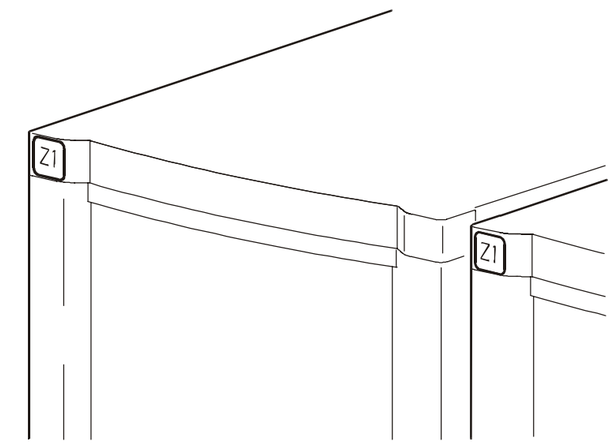

Label the equipment racks

Label equipment racks or enclosures with the appropriate Rack Number Label. There are 42 Rack Number Labels (R1–R42).

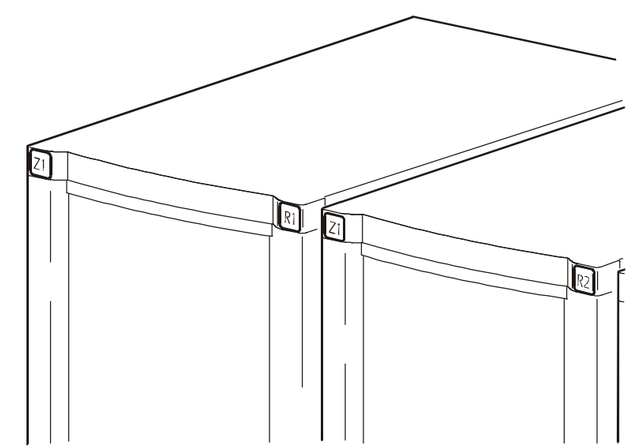

Label each side of every hot aisle

Label an end rack on each side of every hot aisle with a Hot Aisle Label. The end racks can be equipment racks or power equipment (PDU, UPS, XR Battery Enclosure). There are 12 Hot Aisle Labels included—use two for each hot aisle.

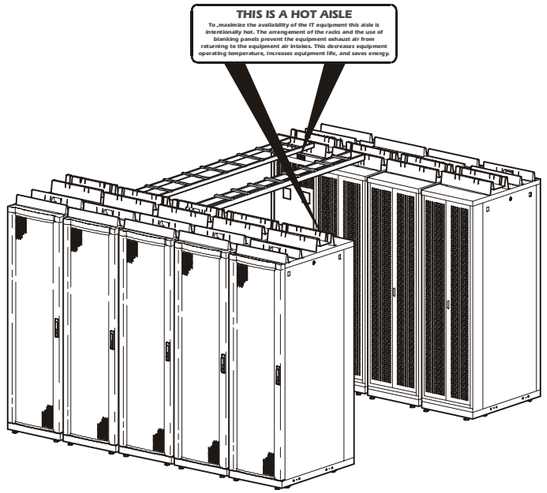

Entire contents copyright © 2004 American Power Conversion. All rights reserved. Reproduction in whole or in part without permission is prohibited. APC, the APC logo, Symmetra, and InfraStruXure are trademarks of American Power Conversion Corporation and may be registered in some jurisdictions. All other trademarks, product names, and corporate names are the property of their respective owners and are used for informational purposes only.

Label the breakers

Use the Breaker Labels to identify the equipment rack(s) associated with each breaker on the front panel of the PDU. Each breaker position corresponds to a PDU power cable feeding power to an equipment rack. Breaker positions correspond to power cables as follows:

PDU Power Cable #	Breaker Positions
1	1, 3, 5
2	2, 4, 6
3	7, 9, 11
4	8, 10, 12
5	13, 15, 17

After the equipment racks are labeled with Rack Number Labels, label each breaker with the appropriate Breaker Label by noting which power cable is feeding each equipment rack.

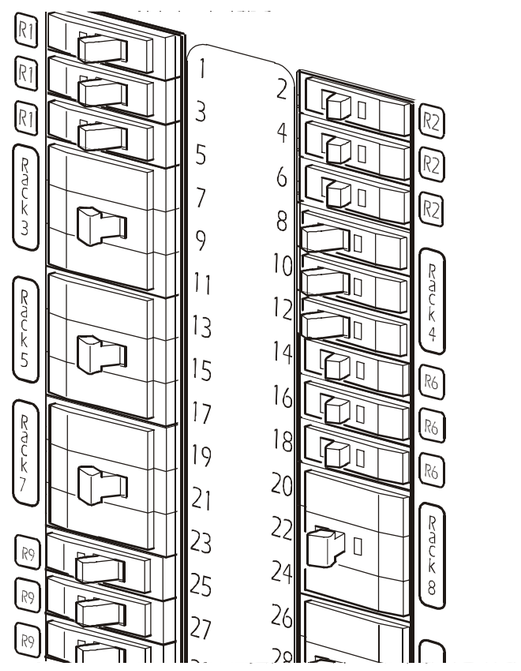

Note The illustration above shows the 40kW InfraStruXure PDU circuit breaker panel. The circuit breaker panel for the 20kW InfraStruXure System is organized horizontally. Use the horizontal breaker labels (included) on a 20kW system.

Identify which power source is feeding the PDU, UPS, and XR Battery Enclosure

If you have a dual-fed system, label each PDU, UPS, and XR Battery Enclosure with the appropriate Power Source Label.

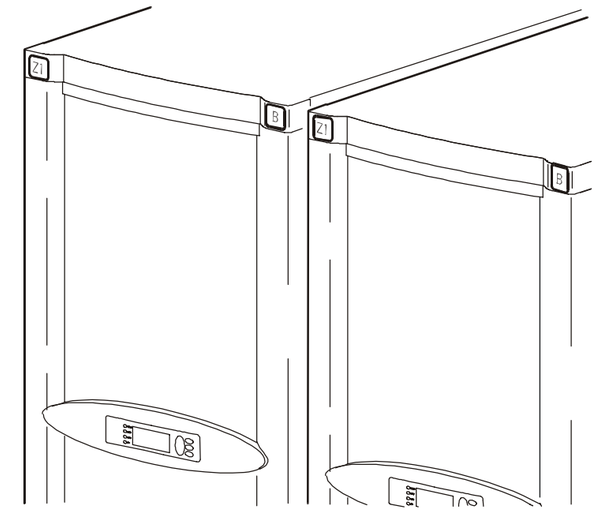

Identify the power source feeding the Rack PDUs
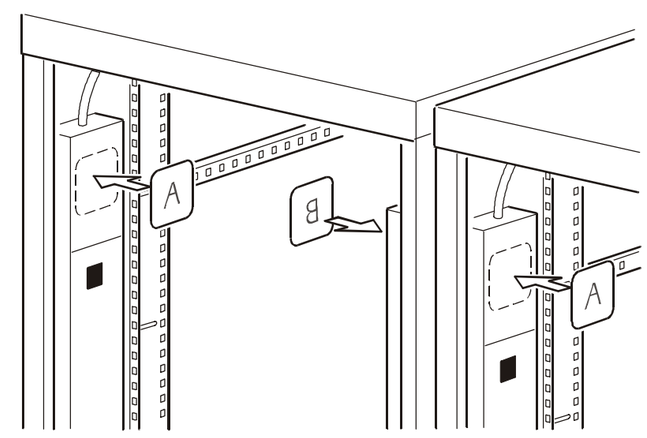
If you have a dual-fed system, label each Rack PDU with the appropriate Power Source Label.