Dell™ UltraSharp UP2718Q

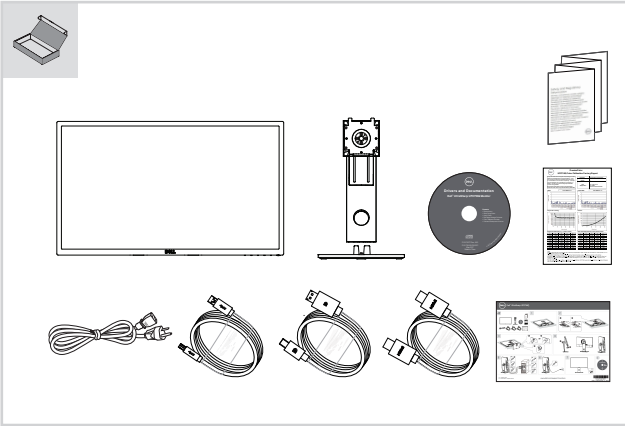

1

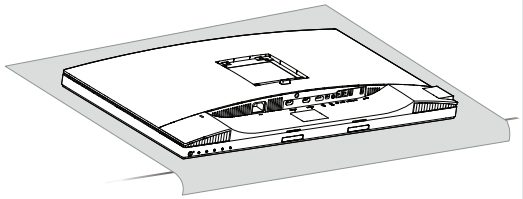

2

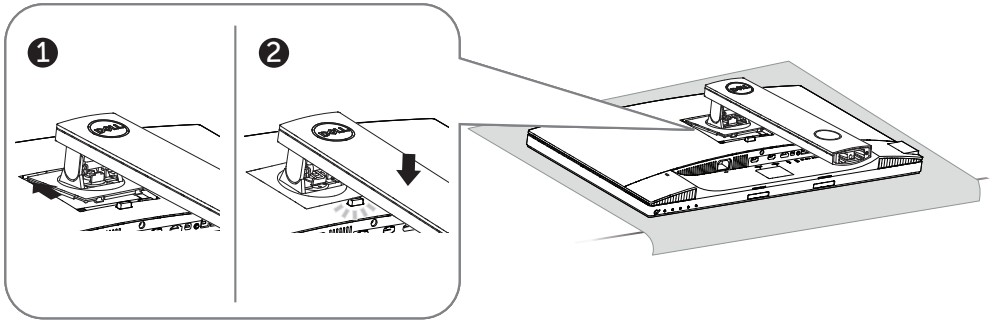

3

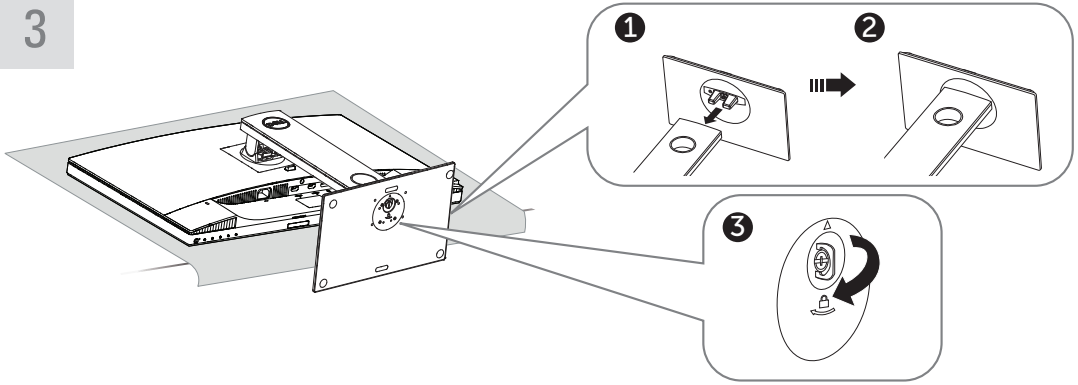

4

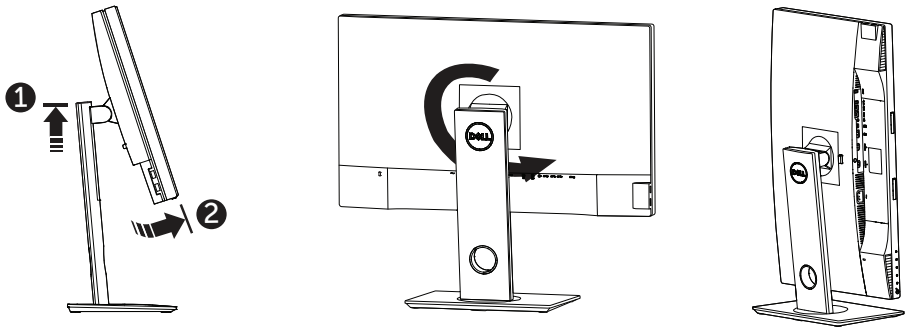

5

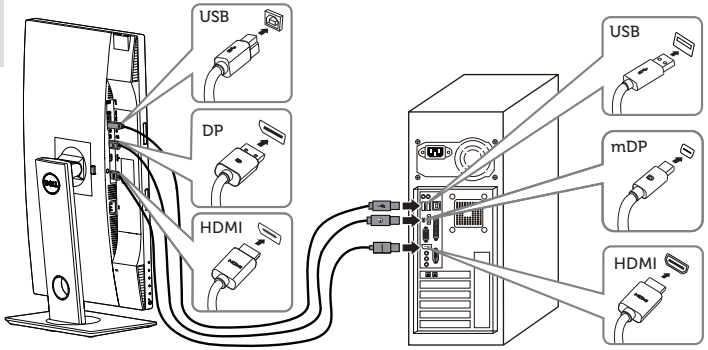

6

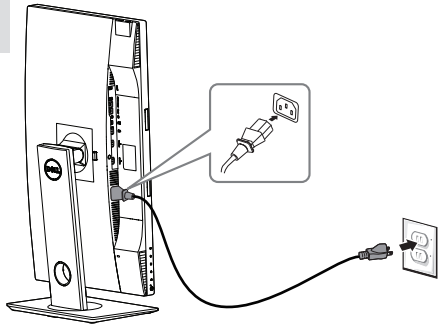

7

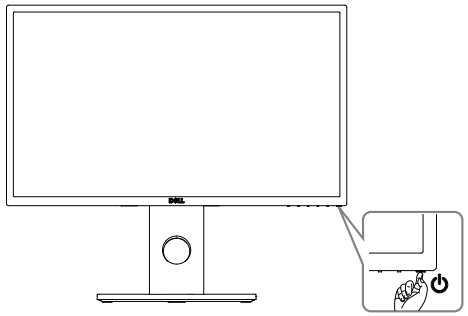

i

Printed in China.
© 2017 Dell Inc. All rights reserved.

www.dell.com/support/monitors

746.A1U02.0001
(DELL P/N:W30VN rev.A00)