POSX

POINT OF SALE SIMPLIFIED

EVO TP6

All in One POS Terminal

User Manual

v1.0

Manual Version 1.0

The information contained in this document is subject to change without notice.
We make no warranty of any kind with regard to this material, including, but not limited to, the implied warranties of merchantability and fitness for a particular purpose. We shall not be liable for errors contained herein or for incidental or consequential damages in connection with the furnishing, performance, or use of this material.

TRADEMARK

Intel®, Pentium® and MMX are registered trademarks of Intel® Corporation.
Microsoft® and Windows® are registered trademarks of Microsoft Corporation.
Other trademarks mentioned herein are the property of their respective owners.

Safety

IMPORTANT SAFETY INSTRUCTIONS

1. To disconnect the machine from the electrical power supply, turn off the power switch and remove the power cord plug from the wall socket. The wall socket must be easily accessible and in close proximity to the machine.
2. Read these instructions carefully. Save these instructions for future reference.
3. Follow all warnings and instructions marked on the product.
4. Do not use this product near water.
5. Do not place this product on an unstable cart, stand, or table. The product may fall, causing serious damage to the product.
6. Slots and openings in the cabinet and the back or bottom are provided for ventilation to ensure reliable operation of the product and to protect it from overheating. These openings must not be blocked or covered. The openings should never be blocked by placing the product on a bed, sofa, rug, or other similar surface. This product should never be placed near or over a radiator or heat register or in a built-in installation unless proper ventilation is provided.
7. This product should be operated from the type of power indicated on the marking label. If you are not sure of the type of power available, consult your dealer or local power company.
8. Do not allow anything to rest on the power cord. Do not locate this product where persons will walk on the cord.
9. Never push objects of any kind into this product through cabinet slots as they may touch dangerous voltage points or short out parts that could result in a fire or electric shock. Never spill liquid of any kind on the product.

CE MARK

This device complies with the requirements of the EEC directive 2014/30/EU with regard to “Electromagnetic compatibility” and 2014/35/EU “Low Voltage Directive”.

FCC

This device complies with part 15 of the FCC rules. Operation is subject to the following two conditions:
(1) This device may not cause harmful interference.
(2) This device must accept any interference received, including interference that may cause undesired operation.

CAUTION ON LITHIUM BATTERIES

There is a danger of explosion if the battery is replaced incorrectly. Replace only with the same or equivalent type recommended by the manufacturer. Discard used batteries according to the manufacturer’s instructions.

Battery Caution

Risk of explosion if battery is replaced by an incorrectly type. Dispose of used battery according to the local disposal instructions.

Safety Caution

Note: To comply with IEC60950-1 Clause 2.5 (limited power sources, L.P.S) related legislation, peripherals shall be 4.7.3.2 “Materials for fire enclosure” compliant.

4.7.3.2 Materials for fire enclosures
For MOVABLE EQUIPMENT having a total mass not exceeding 18kg.the material of a FIRE ENCLOSURE, in the thinnest significant wall thickness used, shall be of V-1 CLASS MATERIAL or shall pass the test of Clause A.2.
For MOVABLE EQUIPMENT having a total mass exceeding 18kg and for all STATIONARY EQUIPMENT, the material of a FIRE ENCLOSURE, in the thinnest significant wall thickness used, shall be of 5VB CLASS MATERIAL or shall pass the test of Clause A.1

LEGISLATION AND WEEE SYMBOL

2012/19/EU Waste Electrical and Electronic Equipment Directive on the treatment, collection, recycling and disposal of electric and electronic devices and their components.

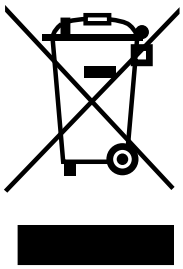

The crossed dust bin symbol on the device means that it should not be disposed of with other household wastes at the end of its working life. Instead, the device should be taken to the waste collection centers for activation of the treatment, collection, recycling and disposal procedure.
To prevent possible harm to the environment or human health from uncontrolled waste disposal, please separate this from other types of wastes and recycle it responsibly to promote the sustainable reuse of material resources.

Household users should contact either the retailer where they purchased this product, or their local government office, for details of where and how they can take this item for environmentally safe recycling.

Business users should contact their supplier and check the terms and conditions of the purchase contract.

This product should not be mixed with other commercial wastes for disposal.

Revision History

Changes to the original user manual are listed below:

Revision	Description	Date
1.0	• Initial release	June 2018

Table of Contents

1. Packing List

1-1. Standard Contents

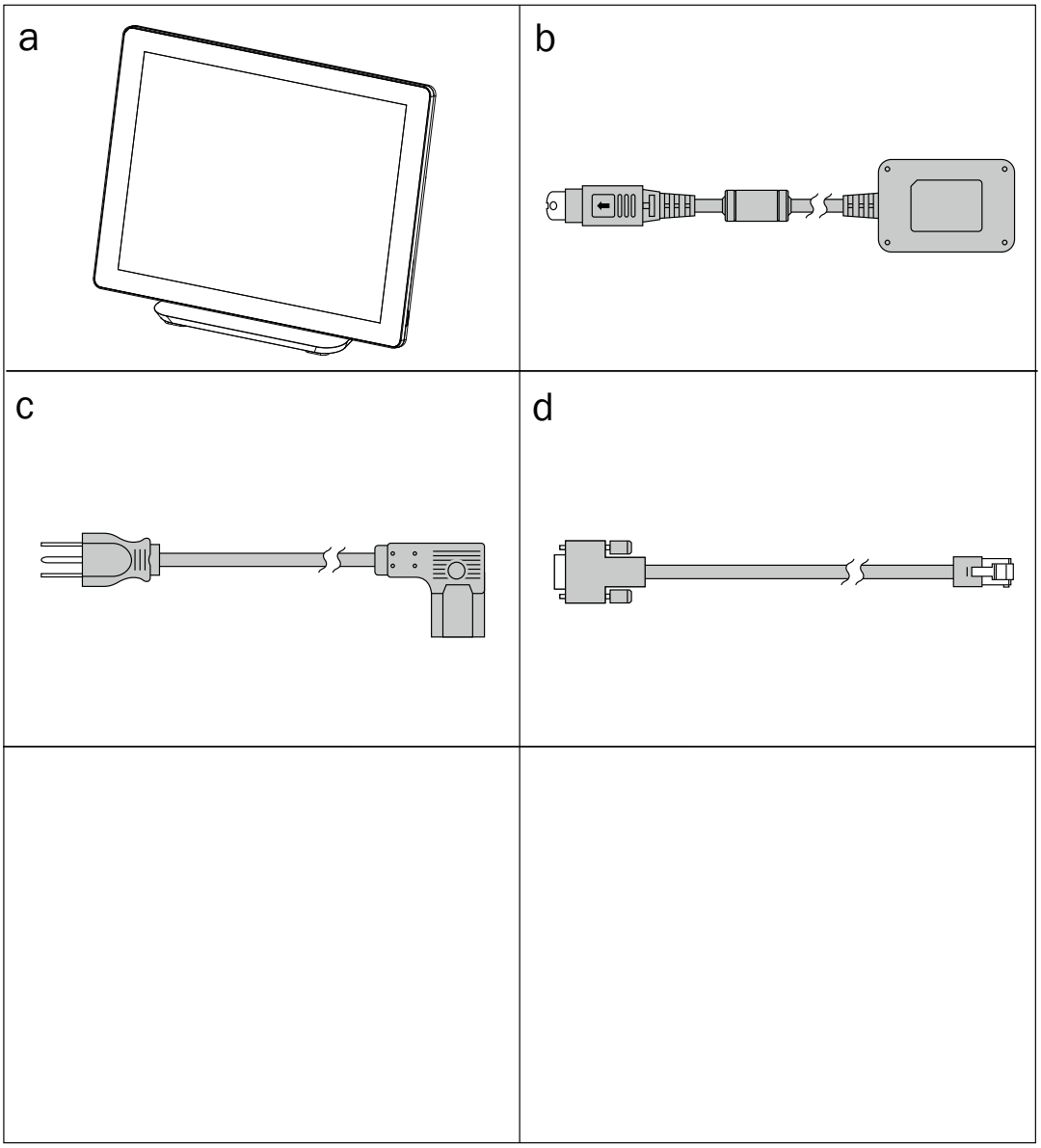

a. System
b. Power adapter
c. Power cord
d. RJ45-DB9 cable (x2)

1-2. Optional Accessories

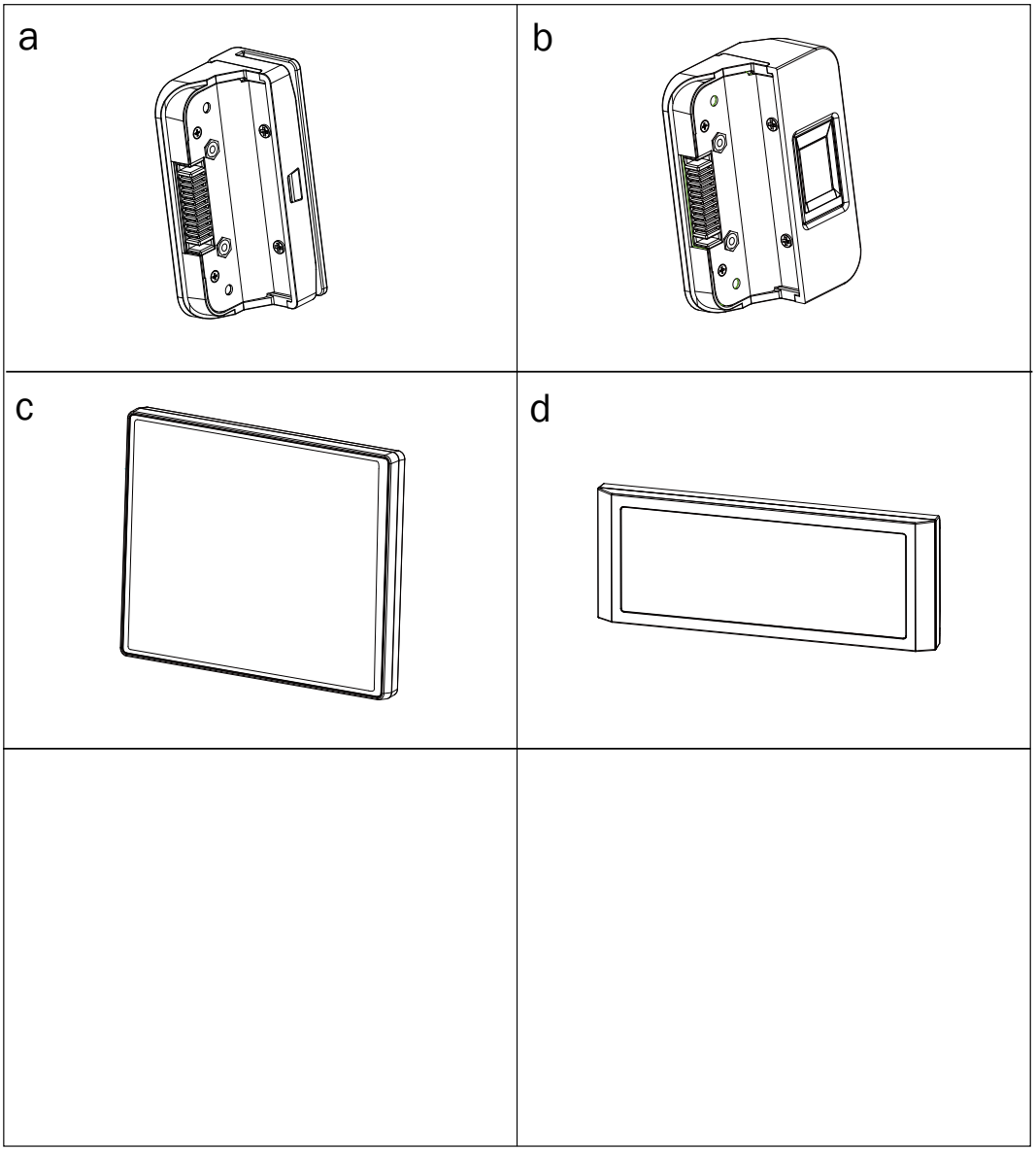

a. MSR
b. Fingerprint reader
c. 8.4" 2nd display
d. 2-line Customer display

2. System View

2-1. Front & Side View

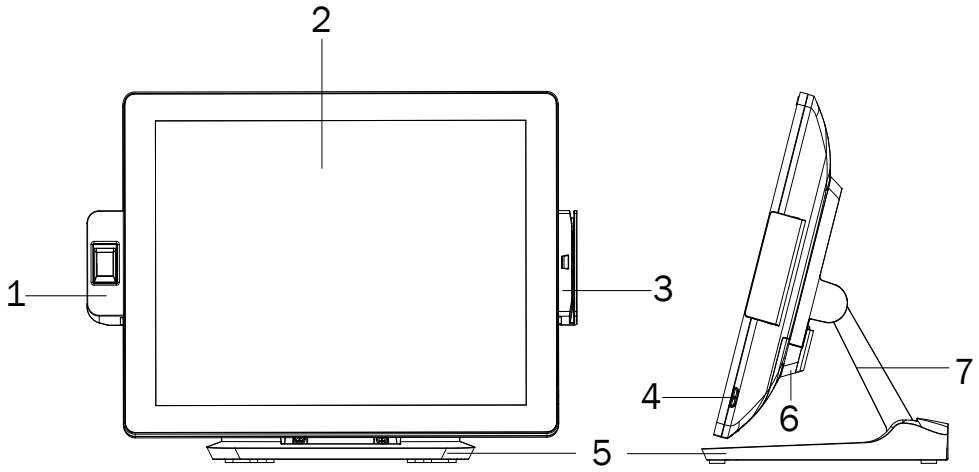

No.	Description
1	Fingerprint (option)
2	Touch screen
3	MSR (option)
4	Power button
5	Stand
6	VESA bottom cover
7	Stand front cover

2-2. Rear View

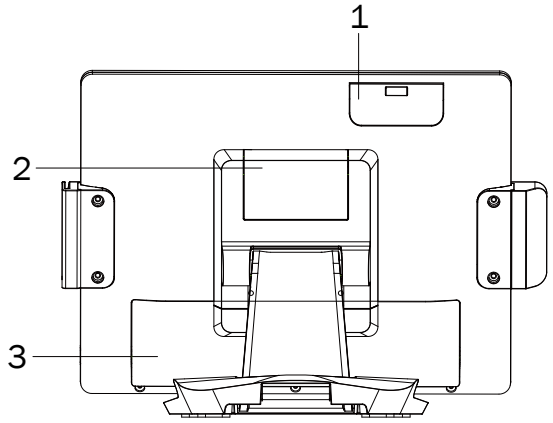

No.	Description
1	HDD cover
2	VESA top cover
3	Cable cover

2-3. IO Ports View

D36 Motherboard

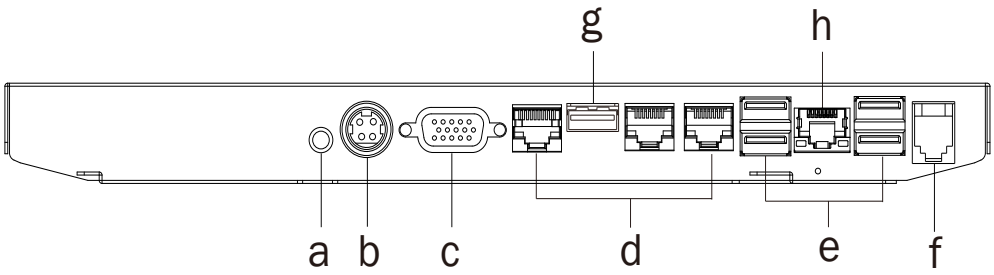

No.	Description
a	Power button
b	DC 19V in
c	VGA
d	COM 1, 2, 3
e	USB 2.0 x 4
f	Cash drawer
g	USB 3.0 x 1
h	LAN

D86U Motherboard

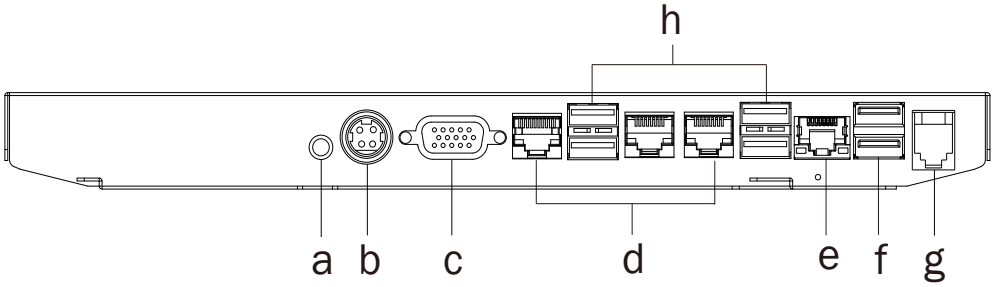

No.	Description
a	Power button
b	DC 19V in
c	VGA
d	COM 1, 2, 3
e	LAN
f	USB 2.0 x 2
g	Cash drawer
h	USB 3.0 x 4

2-4. System Dimensions

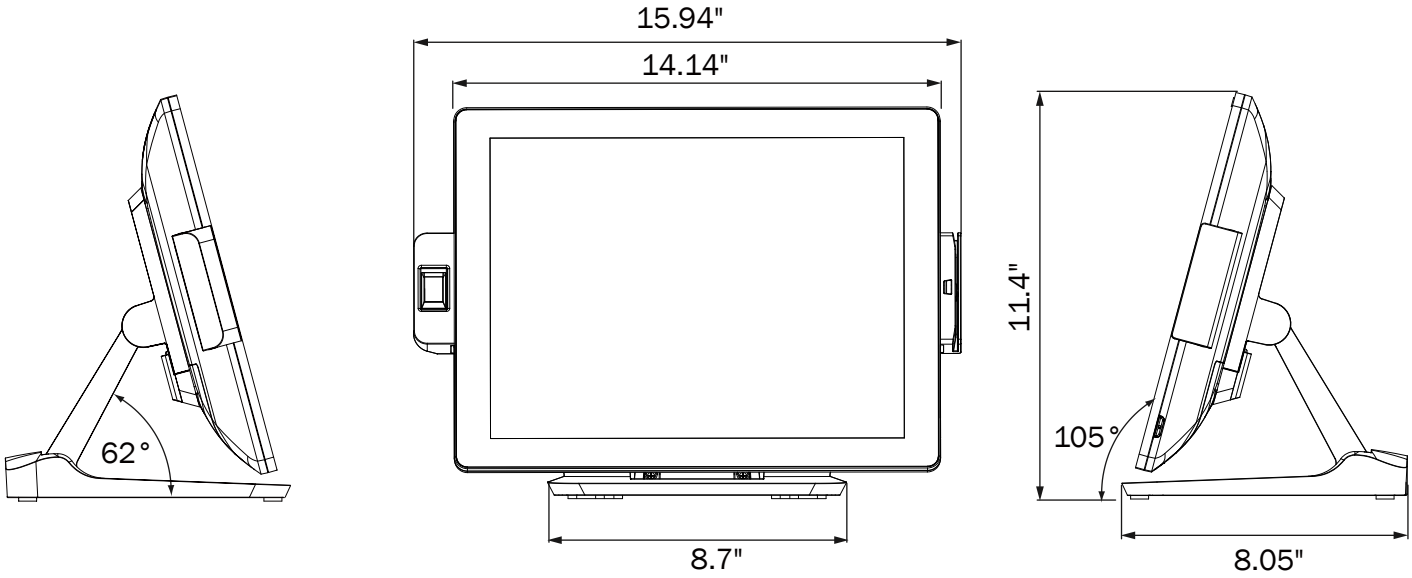

3. System Assembly & Disassembly

3-1. Disassemble the Stand

1. Slide the VESA bottom cover outwards.

2. Loosen the thumb screw (x1) and slide the stand towards the IO panel to release it from the system.

3. Reverse the steps above to attach stand to the system.

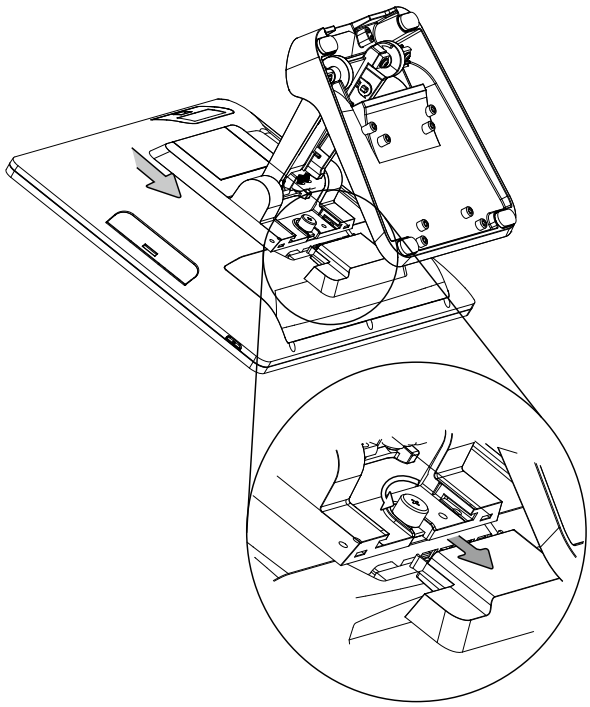

3-2. Remove the Cable Cover

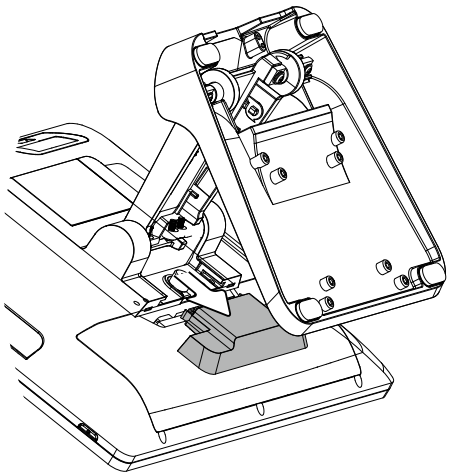

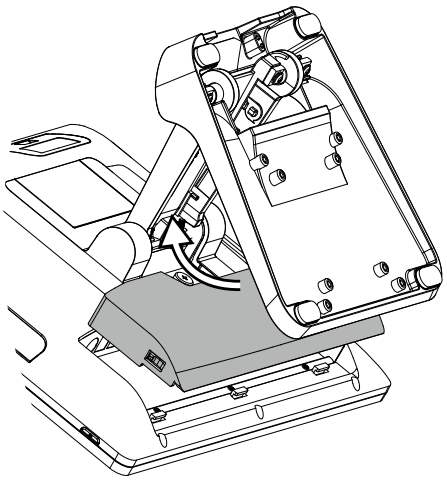

1. Slide the VESA bottom cover outwards.
2. Pull the cable cover upwards to release it from the system.

3-3. Install the Power Adapter

The system is equipped with a 65W or 90W power adapter. Please follow the steps to install the power adapter.

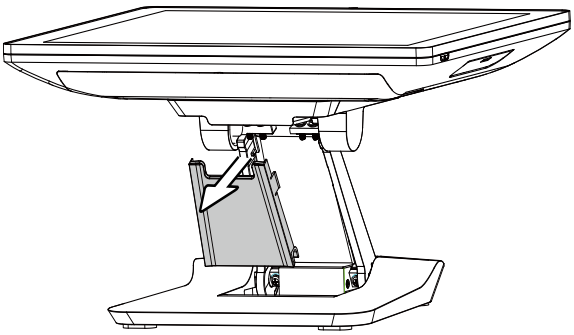

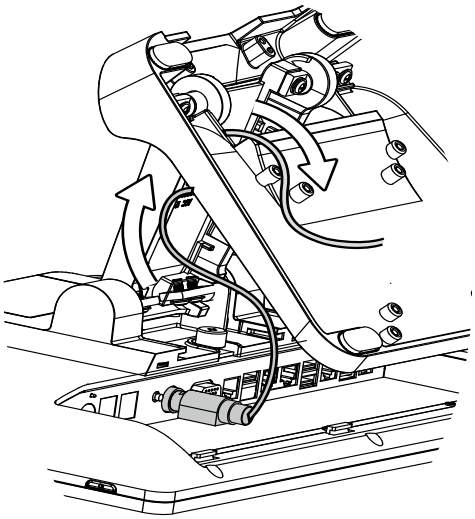

1. The stand is designed to allow for clean cable management. There is a cable channel through the stand, which has a quick access cover. Please pull the front cover of the stand outwards.
2. Place the system face down. Making sure not to scratch the touchscreen.
3. Connect the power adapter to the 19V DC IN port and then route the cable as shown in the picture.
4. Replace the front cover.

3-4. Replace HDD

1. Remove the HDD dummy cover retaining a screw and sliding the drive out.

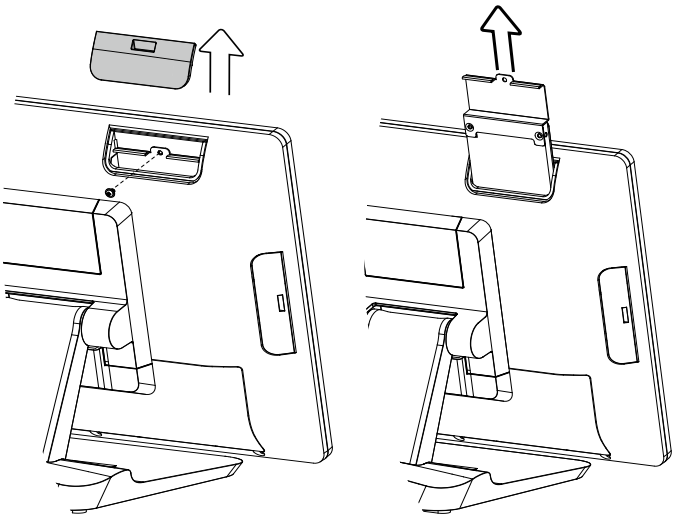

2. Remove the screws (x2) that fix the HDD to the bracket.

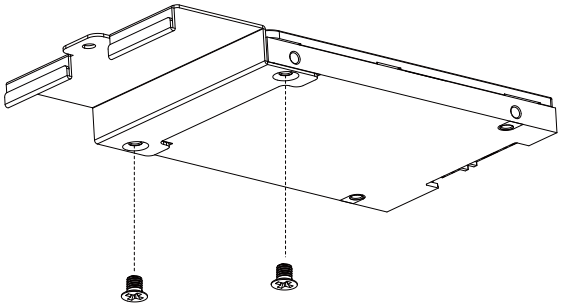

4. Peripheral Installation

4-1. MSR Installation

1. Remove the cover.

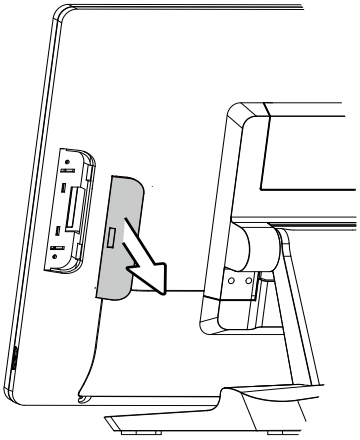

2. Insert the MSR in place and fasten the screws (x2) on the back to secure the module.

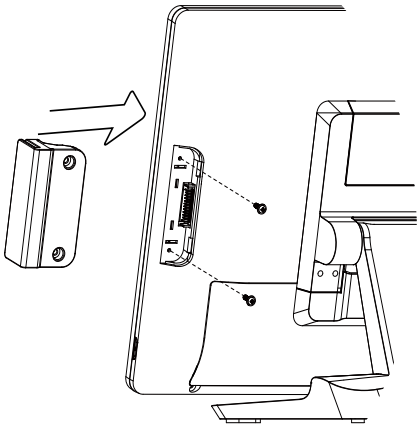

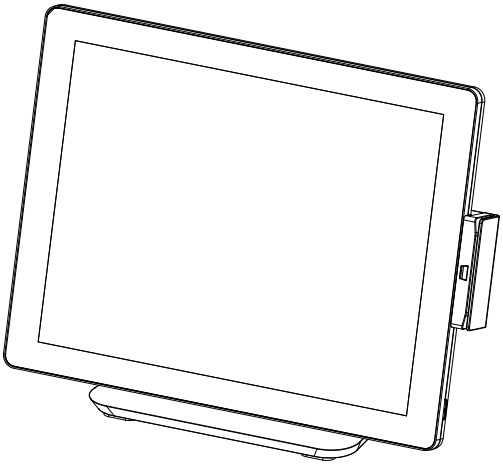

4-2. Fingerprint Reader Installation

1. Remove the cover.

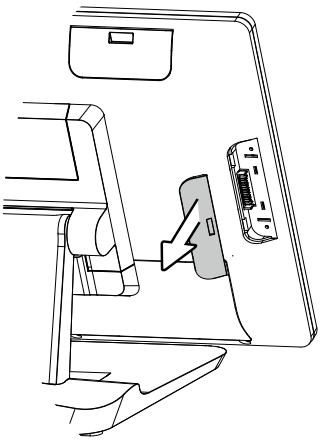

2. Insert the Fingerprint module in place and fasten the screws (x2) on the back to secure the module.

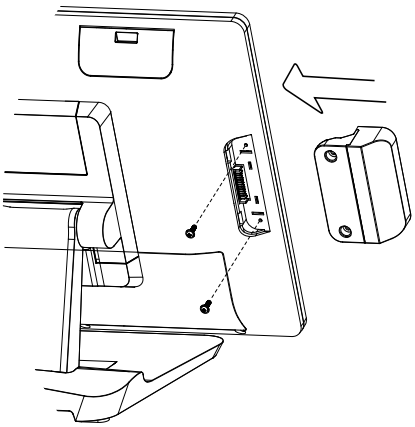

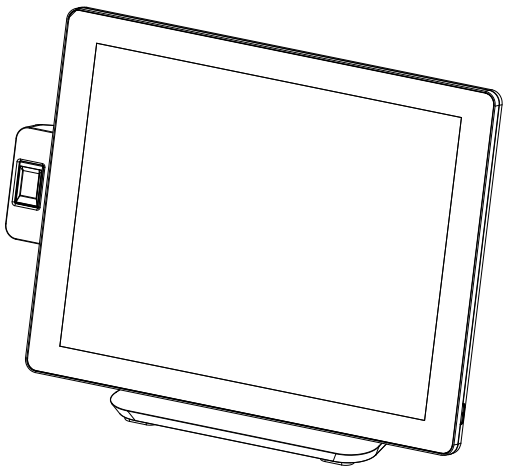

4-3. 2-Line Customer Display Installation

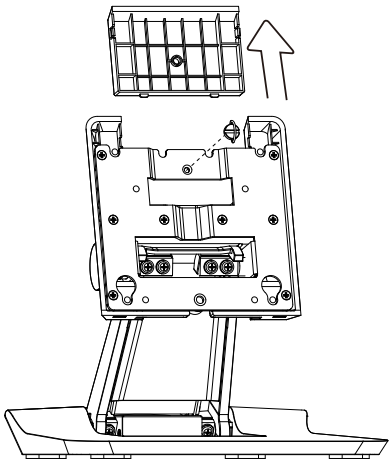

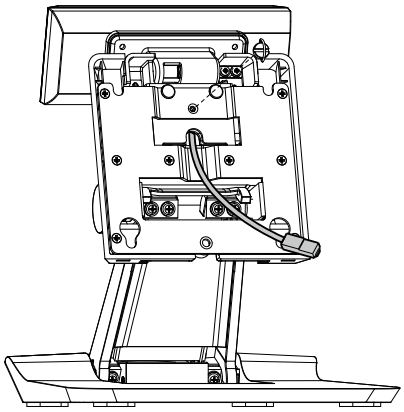

1. Follow the steps in Chapter 3-1 to diassemble the stand from the LCD panel.
2. Remove the thumb screw (x1) from the VESA top cover and then pull the cover up.
3. Attach the LCM module to system by fastening the thumb screw (x1).
4. Route the cable through the hole of the stand as picture shown.

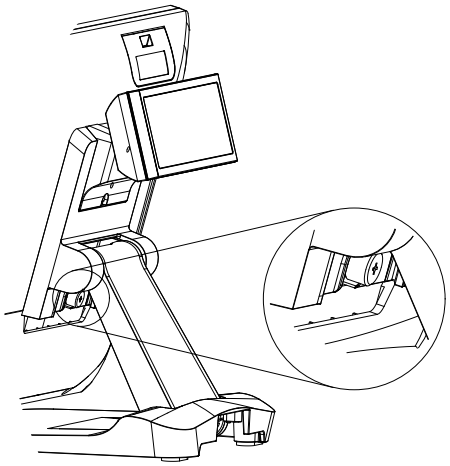

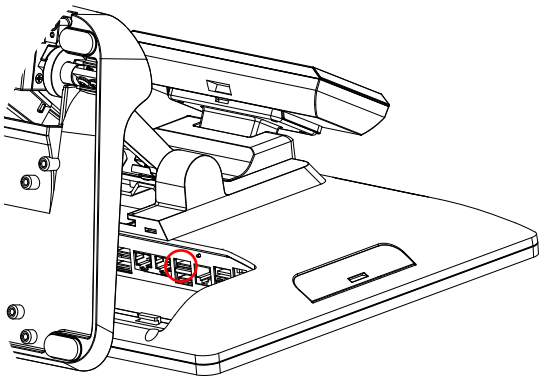

5. Attach the stand to the LCD panel and fasten the thumb screw (x1).
6. Connect the USB cable to a USB port on the systems IO panel.

* Please note the cable cover and the stand front cover (refer to Chapter 2-1 and 2-2) have to be removed before routing the cable.

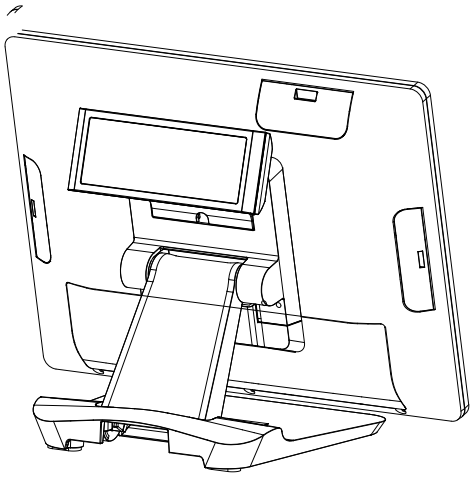

4-4. Second Display Installation

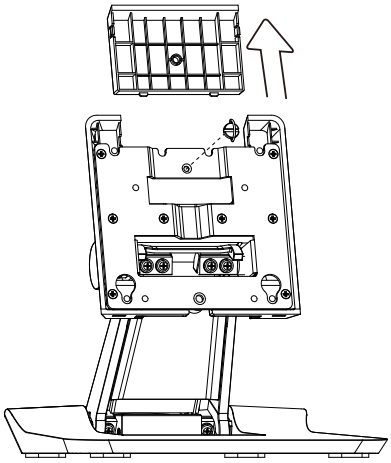

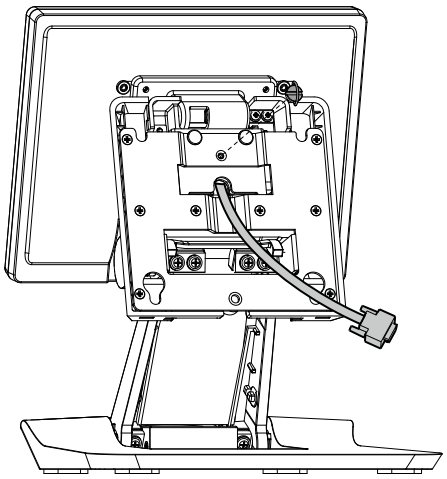

1. Follow the steps in Chapter 3-1 to diassemble the stand from the LCD panel.
2. Remove the thumb screw (x1) from the VESA top cover and then pull the cover up.
3. Attach the 8.4"' 2nd display module to system by fastening the thumb screw (x1).
4. Route the 2nd display cable through the hole of the stand as picture shown.

5. Attach the stand to the LCD panel and fasten the thumb screw (x1).

6. Connect the 2nd display cable to VGA port on the systems IO panel. Make sure the system is powered off.

* Please note the cable cover and the stand front cover (refer to Chapter 2-1 and 2-2) have to be removed before routing the cable.

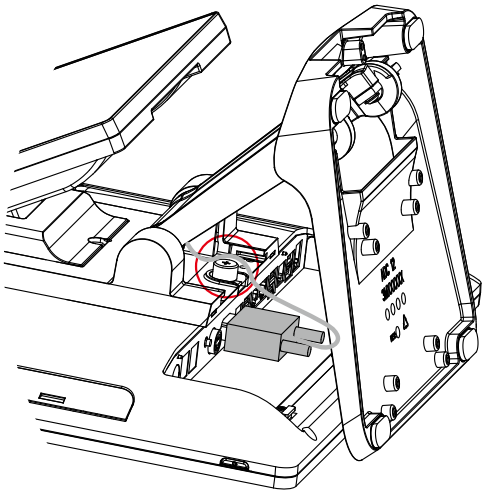

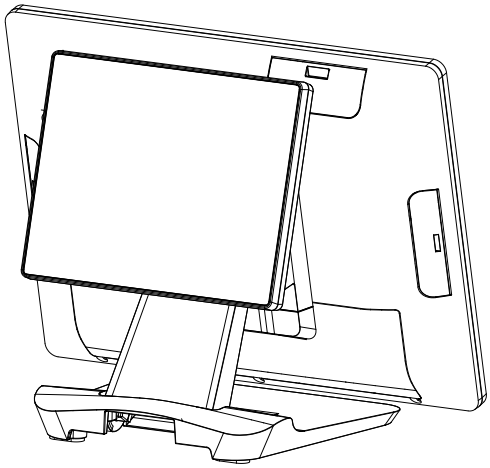

4-5. Cash Drawer Installation

You can install a cash drawer through the cash drawer port. Please verify the pin assignment before installation. NOTE: POS software must be specially programmed to work with the built in cash drawer port.

Cash Drawer Pin Assignment

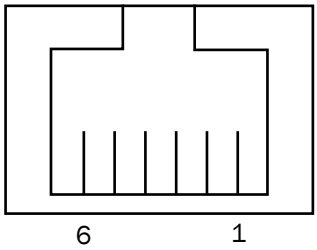

Pin	Signal
1	Cash drawer 2 In
2	Cash drawer 1 Out
3	Cash drawer 1 In
4	12V / 19V (or 24V)
5	Cash drawer 2 Out
6	GND

Cash Drawer Controller Register

The Cash Drawer Controller uses one I/O address to control the Cash Drawer.

Register Location: 0x482h
Attribute: Read / Write
Size: 8bit

BIT	BIT7	BIT6	BIT5	BIT4	BIT3	BIT2	BIT1	BIT0
Attribute	Reserved			CD1 Out	CD1 In	Reserved		

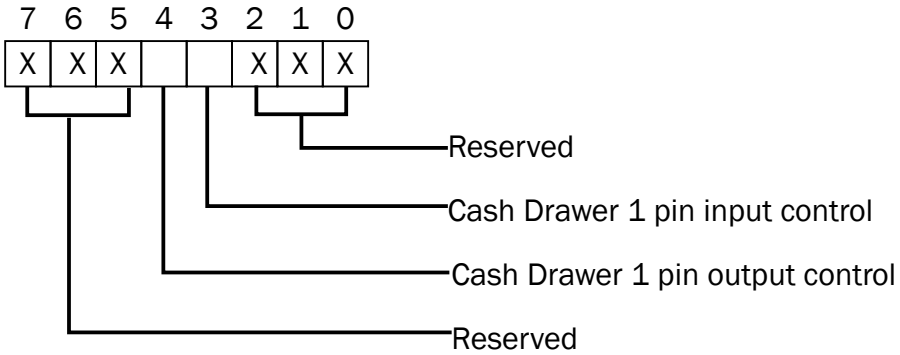

Bit 7: Reserved
Bit 6: Reserved
Bit 5: Reserved
Bit 4: Cash Drawer 1 pin output control.
= 1: Open the Cash Drawer
= 0: Allow Cash Drawer to close
Bit 3: Cash Drawer 1 pin input control.
= 1: Cash Drawer closed or no Cash Drawer
= 0: Cash Drawer opened
Bit 2: Reserved
Bit 1: Reserved
Bit 0: Reserved

Note: Please follow the Cash Drawer control signal design to control the Cash Drawer.

Cash Drawer Control Command Example

Use Debug.EXE program from the command line

Command	Cash Drawer
O 482 10	Open
O 482 00	Allow to close
► Set the I/O address 482h bit4 =1 for opening Cash Drawer by “DOUT bit0” pin control. ► Set the I/O address 482h bit4 = 0 to allow closing the Cash Drawer.	

Command	Cash Drawer
I 482	Check status
► The I/O address 482h bit3 =1 Cash Drawer is opened or does not exist. ► The I/O address 482h bit3 =0 Cash Drawer is closed.	

5. Specification

Model Name	EVO TP6	
Mainboard	**D36**	**D86U**
CPU support	Intel Bay Trail CPU BGA-1170 22nm Intel Bay Trail CPU Celeron J1900 2.4GHz, L2 2M	Intel SKYLAKE U CPU CPUBGA-1296 14nm Pentium 4405U LLC 2M (15W,EIA) I3-6100U 2.3GHz, LLC 3M(15W, EIA) i5-6200U 2.4GHz, LLC 3M (15W,EIA)
System memory	1x DDR3 SO-DIMM up to 8GB, 1066/1333MHz	1x DDR3 SO-DIMM up to 8GB, 1600MHz
Graphic memory	Intel HD Graphics DX11 and OCL1.1	Intel HD Graphics (Gen 9) DX12 and OCL4.2
LCD Touch Panel		
LCD size	15” TFT LED Panel (LVDS)	15” LED (eDP)
Brightness (cd/m²)	250 nits	350 nits
Maximal resolution	1024 x 768	
Touch screen type	True flat PCAP	
Tilt angle	0~90°	
Storage		
Storage	1 x 2.5” SATA HDD bay	
FlashMemory	Option SATA SSD flash card	
Expansion		
Mini PCI-E socket	1	
m.2	1 (M.2 2230 or M.2 1216)	
I/O Ports		
USB port	5 (1 x USB3.0/2.0；4 x USB2.0)	6 (4 x USB3.0/2.0；2 x USB2.0)
Serial / COM	3 (RJ45 type, COM1 & COM2 0V/5V, COM3 0V/12V, power enabled by BIOS)	
LAN (10/100/1000)	1 x RJ45	
VGA	1 (12V powered enable by BIOS)	
Cash drawer	1 x RJ11 (12V /24V)	
DC jack	1	
Power switch	1	
Power		
Power adapter	65W /19V	90W /19V
Peripherals (optional)		
MSR	1 (USB)	
Fingerprint	1 (USB)	
Second display	8.4” LED Second display, resolution 800 *600	
Customer display	Flush mount LCM display 2 x 20 characters (COM)	

Model Name	**EVO TP6**	
Mainboard	**D36**	**D86U**
Certificate		
EMC & Safety	FCC, Class A, CE, LVD	
ESD	4 kV Contact discharge, 8 kV Air discharge	
Environment		
Sealing	IP54 (front side)	
Operating temperature	32°F ~ 95°F (0°C ~ 35°C)	
Storage temperature	-4°F ~ 140°F (-20°C ~ 60°C)	
Humidity	20% ~ 85% RH non-condensing	
Dimension (W x D x H)	14.14" x 8" x 11.4" (359.36 x 204.47 x 289.61mm)	
Weight	9.5 lb (4.3kg)	
OS supported	Windows 7, POSReady7, Windows Embedded 8.1 Industry, Windows 10 IOT Enterprise, Linux Kernel 3.8 or above	Windows 10 IOT Enterprise (64-bit) Linux: Fedora 25 Ubuntu16.10 Desktop Kernel 4.7 above

*** This specification is subject to change without prior notice.**

6. Configuration

6-1. D36 Motherboard

6-1-1. Motherboard Layout

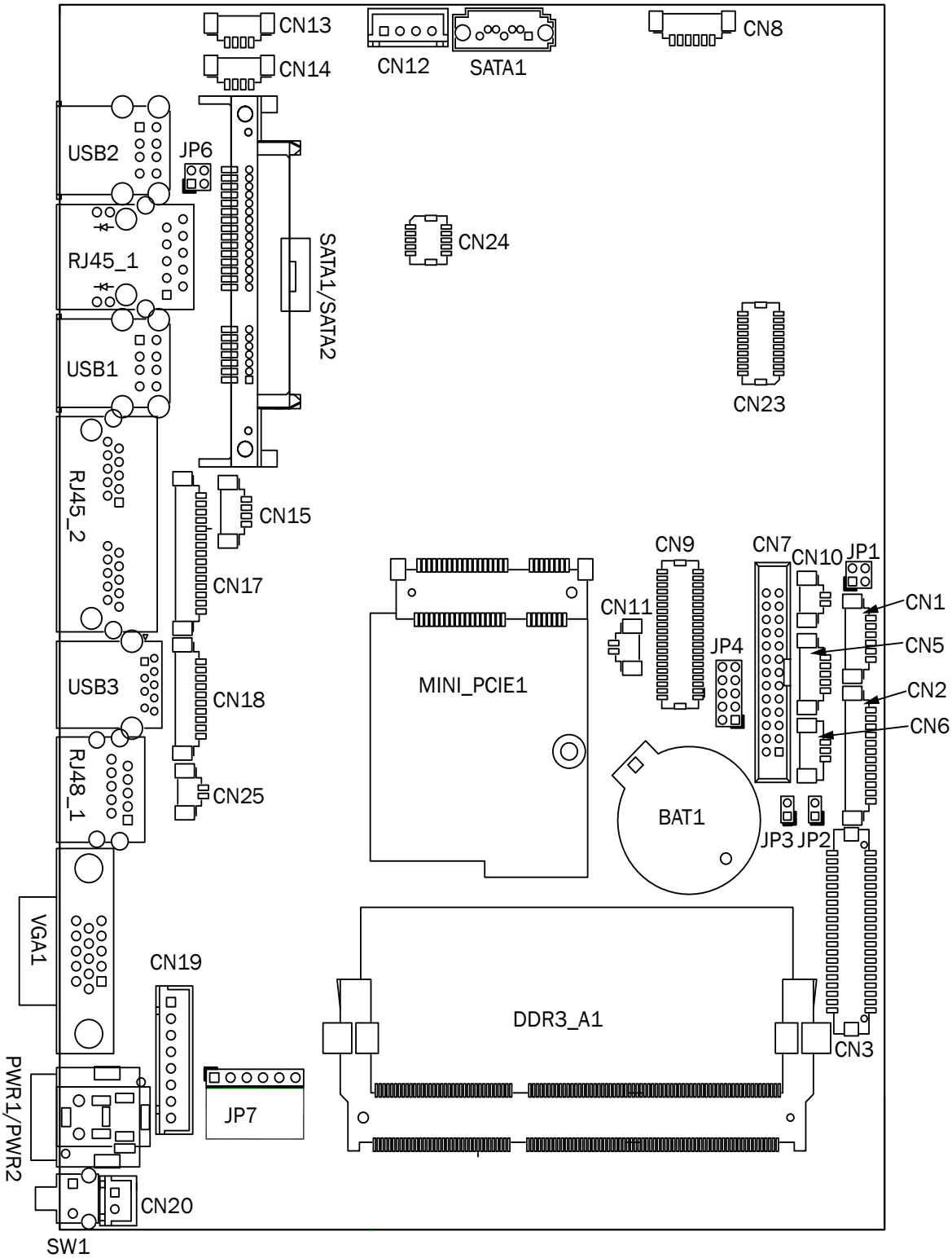

6-1-2. Connectors & Functions

Connector	Function
CN1	Front I/O board
CN2	Inverter connector
CN3	LVDS connector
CN6	System FAN connector
CN7	LPT port connector
CN8	Speaker & MIC connector
CN9	40pin external connector
CN10	HDD LED connector
CN11	Power LED connector
CN12	SATA power connector
CN13/14	USB port (internal)
CN15	PS2 keyboard connector
CN17	MSR connector
CN18	COM5 (touch) connector
CN19	Wide Range
CN20	Power button (internal)
CN21	LCM connector
CN25	S5/S0 Status LED
PWR1/PWR2	DC Jack
RJ45_1	LAN connector
RJ45_2	COM1/ COM2
RJ48_1	COM3
DDR3_A1	DDR3 SO-DIMM
SATA0/SATA2	SATA
USB1/USB2	USB2.0
USB3	USB3.0
VGA1	CRT connector
SW1	Power button
MINI_PCIE1	MINI PCIE
JP1	Inverter select
JP4	LCD ID setting
JP7	Touch connector

6-1-3. Jumper Setting

Inverter Selection

Function	JP1
▲LED	1 3 2 4
CCFL	1 3 2 4

COM1/COM2/COM3 Power Setting

COM1, COM2 and COM3 can be set to provide power to your serial device. The voltage can be set to +5V or +12V in the BIOS.

1. Power on the system, and press the <DEL> key when the system is booting up to enter the BIOS Setup utility.
2. Select the Advanced tab.
3. Select **VGA/COM Power Configuration** Ports and press <Enter> to go to display the available options.

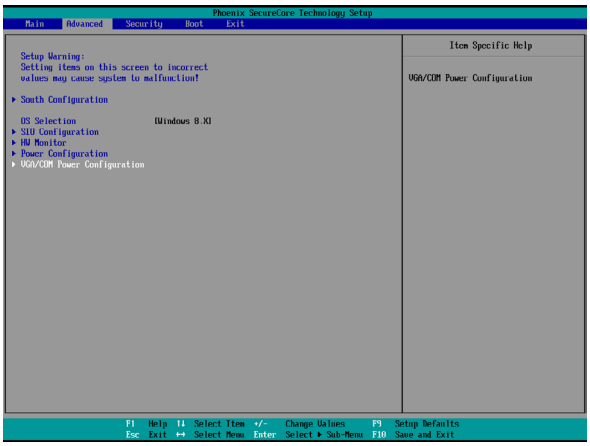

4. To enable the power, select COM1 ,COM2 or COM3 Power setting and press <Enter>. Select Power and press <Enter>. Save the change by pressing F10.

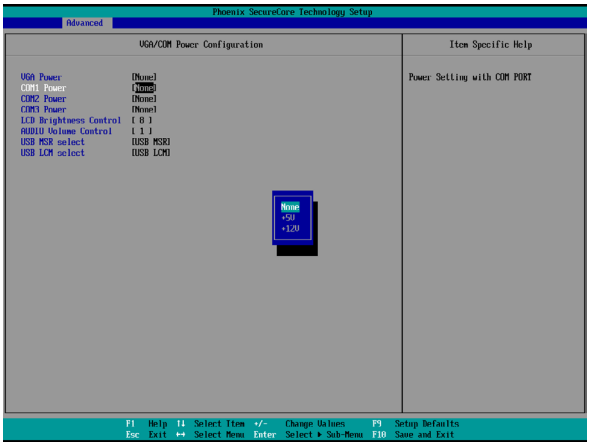

▲ = Manufacturer Default Setting

LCD ID Setting

Panel#	Resolution	LVDS		Output Interface	JP3
		Bits	Channel		
1	800 x 600	18	Single	LVDS Panel	1 [3 5 7] 9 2 [4 6 8] 10
2	800 x 600	24	Single	LVDS Panel	[1 5 7] 3 9 [2 6 8] 4 10
3	1024 x 768	18	Single	LVDS Panel	1 3 [5 7] 9 2 4 [6 8] 10
4	1024 x 768	24	Single	LVDS Panel	[1 3] 5 [7] 9 [2 4] 6 [8] 10
5	1366 x 768	18	Single	LVDS Panel	1 [3] 5 [7] 9 2 [4] 6 [8] 10
6	1366 x 768	24	Single	LVDS Panel	[1] 3 5 [7] 9 [2] 4 6 [8] 10
7	1024 x 600	18	Single	LVDS Panel	1 3 5 [7] 9 2 4 6 [8] 10
8	1280 x 1024	24	Dual	LVDS Panel	[1 3 5] 7 9 [2 4 6] 8 10
9	1440 x 900	24	Dual	LVDS Panel	1 [3 5] 7 9 2 [4 6] 8 10
10	1028 x 800	18	Dual	LVDS Panel	[1] 3 [5] 7 9 [2] 4 [6] 8 10
15	1920 x 1080	24	Dual	LVDS Panel	1 3 5 7 9 2 4 6 8 10
				CRT	1 3 5 7 [9] 2 4 6 8 [10]

1 2 Jumper open [1 2] Jumper short

6-2. D86U Motherboard

6-2-1. Motherboard Layout

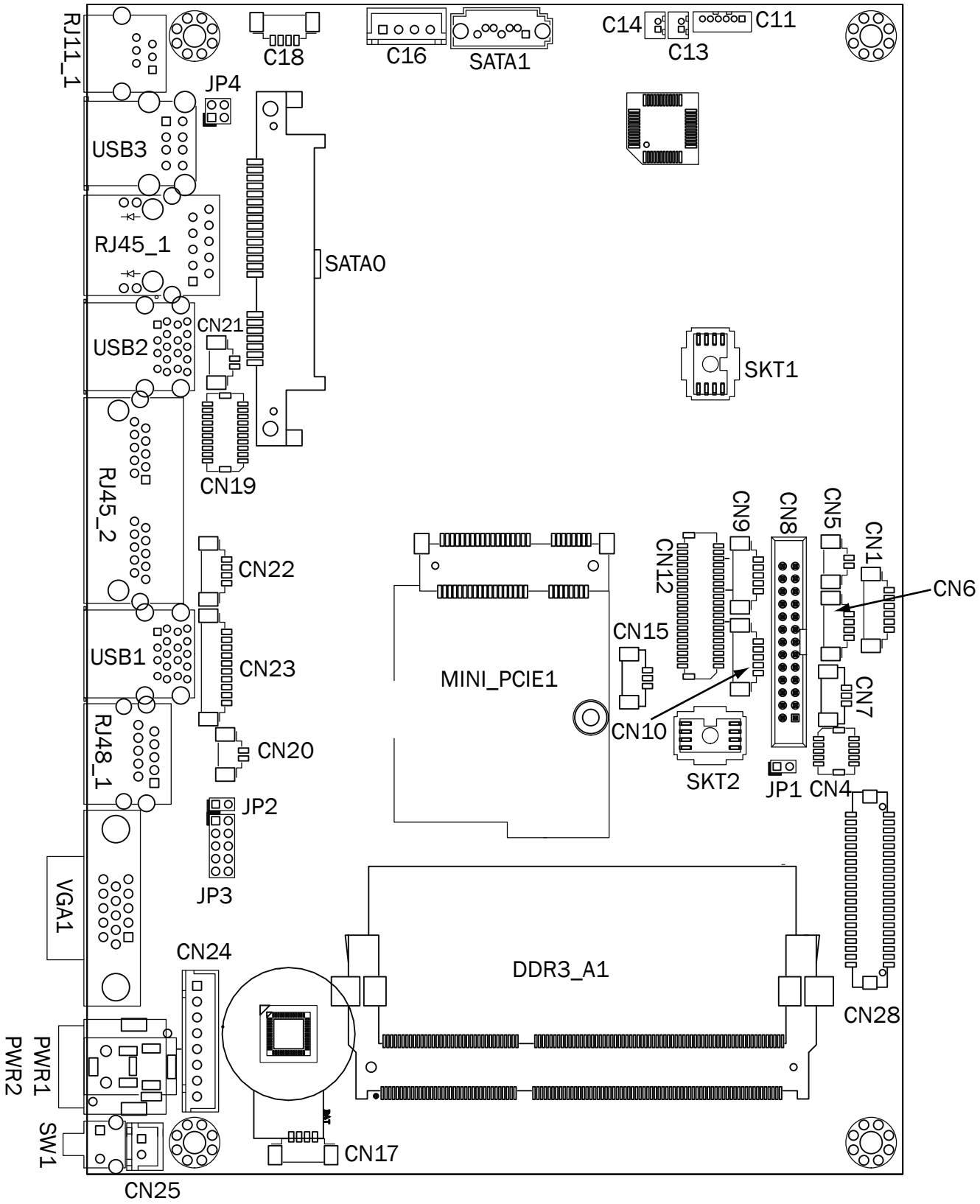

6-2-2. Connectors & Functions

Connector	Function
CN1	Front I/O board
CN4	NFC
CN5	HDD LED connector
CN6	USB connector
CN7	System FAN connector
CN8	LPT port connector
CN9	Smart device connector
CN10	Debug port
CN11	Speaker & MIC connector
CN12	40 pin external connector
CN13	Audio connector(right)
CN14	Audio connector(left)
CN15	Two color LED
CN16	SATA power connector
CN17/18	USB connector
CN19	SDR connector
CN20	Battery connector
CN21	Power LED connector
CN22	PS/2 connector
CN23	COM5 connector
CN24	Wide range connector
CN25	Power button connector
CN26	LCM connector
CN28	51 pin connector
CN29	eDP connector
PWR1/PWR2	DC Jack
RJ11_1	Cash drawer connector
RJ45_1	LAN connector
RJ45_2	COM1/ COM2
RJ48_1	COM3
DDR3_A1	DDR3 SO-DIMM
SATA1	SATA connector
USB1/USB2	USB3.0
USB3	USB2.0
VGA1	CRT connector
SW1	Power button
MINI_PCIE1	MINI PCIE
JP1	Hardware reset
JP2	RTC reset
JP3	LCD ID setting
JP4	Cash drawer power setting

6-2-3. Jumper Setting

Cash Drawer Power Setting

Function	JP4
▲ +19V	1 3 2 4
+12V	1 3 2 4

COM1/COM2/COM3 Power Setting

COM1, COM2 and COM3 can be set to provide power to your serial device. The voltage can be set to +5V or +12V in the BIOS.

1. Power on the system, and press the <DEL> key when the system is booting up to enter the BIOS Setup utility.
2. Select the Advanced tab.
3. Select **VGA/COM Power Configuration** Ports and press <Enter> to go to display the available options.

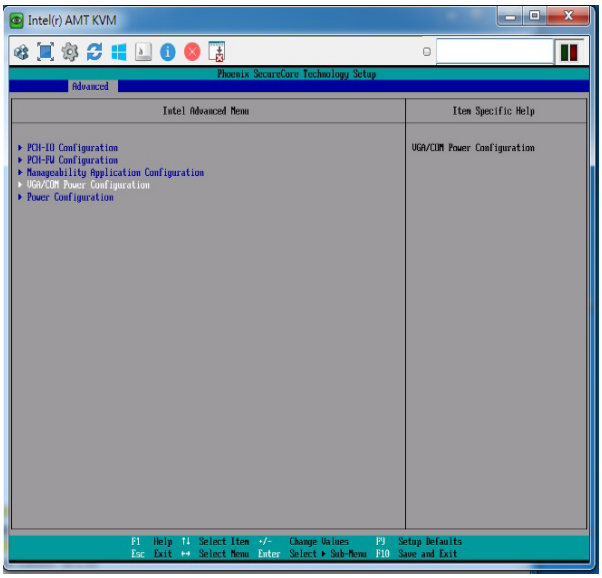

4. To enable the power, select COM1 ,COM2 or COM3 Power setting and press <Enter>. Select Power and press <Enter>. Save the change by pressing F10.

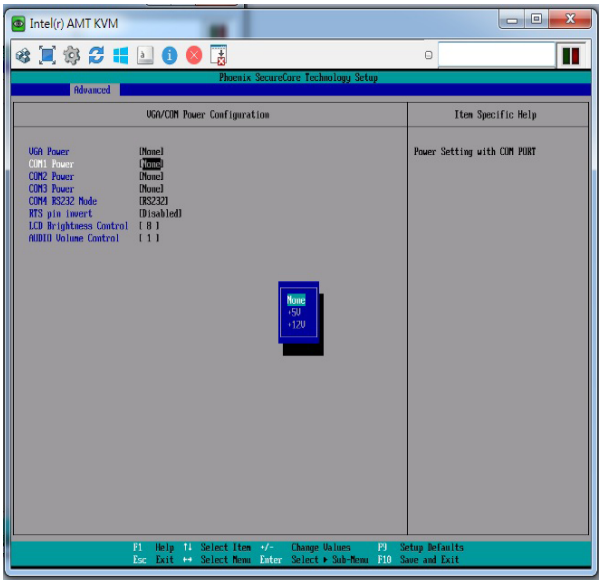

▲ = Manufacturer Default Setting

LCD ID Setting

Panel#	Resolution	LVDS		Output Interface	JP3
		Bits	Channel		
1	800 x 600	18	Single	LVDS Panel	1 [3 5 7] 9 2 [4 6 8] 10
2	800 x 600	24	Single	LVDS Panel	[1 5 7] 9 [2] 3 [6 8] 10 4
3	1024 x 768	18	Single	LVDS Panel	1 3 [5 7] 9 2 4 [6 8] 10
4	1024 x 768	24	Single	LVDS Panel	[1 3 7] 9 [2 4] 5 [8] 10 6
5	1366 x 768	18	Single	LVDS Panel	1 [3] 5 [7] 9 2 [4] 6 [8] 10
6	1366 x 768	24	Single	LVDS Panel	[1 7] 9 [2] 3 5 [8] 10 4 6
7	1024 x 600	18	Single	LVDS Panel	1 3 5 [7] 9 2 4 6 [8] 10
8	1280 x 1024	24	Dual	LVDS Panel	[1 3 5] 7 9 [2 4 6] 8 10
9	1440 x 900	24	Dual	LVDS Panel	1 [3 5] 7 9 2 [4 6] 8 10
15	1920 x 1080	24	Dual	LVDS Panel	1 3 5 7 9 2 4 6 8 10
				CRT	1 3 5 7 [9] 2 4 6 8 [10]

1
2 Jumper open

[1
2] Jumper short