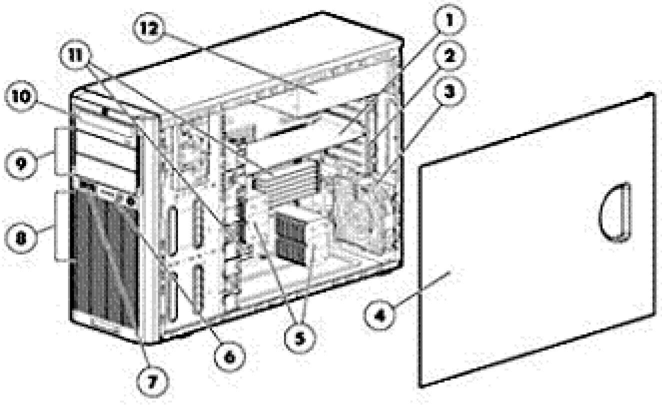

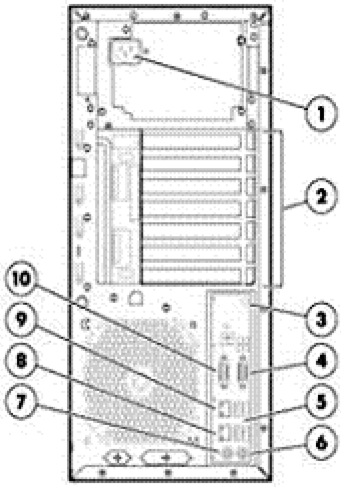

Front View:

1. SATA/SAS adapter card
2. Card bracket retainer
3. Rear fan
4. Side access panel
5. Processor socket and Heatsink
6. LED indicators and power button
7. Upfront USB ports
8. Hard drive bay (inside)
9. One full height or two half height media bay (s)
10. Optical drive media bay
11. DIMM socket (total twelve DIMMs supported)
12. Power Supply

Rear View:

1. AC input connector
2. Expansion slot
3. UID LED
4. VGA monitor connector
5. USB 2.0 ports (4)
6. Keyboard connector
7. Mouse connector
8. NIC port
9. Dedicate NIC port
10. Serial port connector

At A Glance

The HP ProLiant ML150 G6 is an expandable and affordable solution for growing businesses. Redundant power supply and redundant fan options help to provide more protection on power and thermal to keep your critical business running. Data security, which is one of the major concerns in the industry, is ensured by the TPM offering that provides data encryption to protect from data theft. Companies with remote locations can take advantage of the ML150 G6 embedded Lights-Out 100 remote management feature to decrease server/company downtime, decrease emergency travel needs, and increase overall productivity. Overall, the HP ProLiant ML150 G6 is easy on your IT budget with significant headroom to grow with your business.

- Processor:
    - Quad-Core Intel® Xeon® E5500 processor series, up to 2.53GHz
    - Dual-Core Intel® Xeon® E5500 processor series, up to 1.86 GHz
    - Intel® 5500 chipset
- Memory:
    - Twelve (12) DIMM slots
    - Up to 48GB, using PC3-10600R DDR3 Registered (RDIMM) memory, operating at 1066MHz when fully populated at 2 DIMMs per Channel in 12 slots.
    - Up to 24GB, using PC3-10600E DDR3 Unbuffered (UDIMM) memory, operating at 1066MHz when fully populated at 2 DIMMs per Channel in 12 slots.

Overview

- Storage Controller:
  - Performance model: HP Smart Array P410/256MB RAID Controller (RAID 0/1/1+0/5/5+0)
  - Base model: HP Smart Array P410/0MB RAID Controller (RAID 0,1std)
  - Entry model: HP Smart Array B110i SATA RAID Controller (RAID 0,1,10)
- Internal Drive Support:
  - Internal SAS storage capacity of up to 8.0TB (8 x 1TB 3.5" SAS drives)
  - Internal SATA storage capacity of up to 8.0TB (8 x 1TB 3.5" SATA drives)

    NOTE: Supports up to eight (8) SAS/SATA hard drives via 2nd hot plug hard disk drive cage, 750W CS HE Power Supply, Redundant Power Supply Enablement Kit and HP Smart Array P410 Controller.
- Network Controller:
  - Embedded HP NC107i PCI Express Gigabit Server Adapter
- Expansion Slots:
  - Five expansion slots:
    - Slot 1: 32bit/33MHz PCI 3.3V
    - Slot 2: x8 PCI-Express (Gen 1 x4 link)
    - Slot 3: x8 PCI-Express (Gen 2 x4 link)
    - Slot 4: x16 PCI-Express (Gen 2 x16 link)
    - Slot 5: x8 PCI-Express (Gen 2 x4 link)
- Ports:
  - 8 USB 2.0: 4 rear, 2 internal (1 for internal USB tape), 2 front
- Security - Trusted Platform Module:
  - One (1) internal TPM 1.2 module connector
- Power Supply:
  - Standard: 460W Non-Hot Plug, Non-Redundant Power Supply (70% efficiency)
  - Optional: 750W CS HE Gold Hot Plug Power Supply (92% efficiency)

    NOTE: The 2nd hot plug hard disk drive cage requires the purchase of 750W Redundant Power Supply, Redundant Power Supply Enablement Kit and HP Smart Array P410 Controller (if not already part of the configuration)
- Form Factor:
  - Tower (5U)

    NOTE: Rack mounting available via HP Tower to Rack Conversion Tray, Universal Kit. Please see the options section in this QuickSpecs
- Infrastructure Management:
  - HP Insight Control suite for Linux (ICE-LX), a product option, delivers essential infrastructure management that can help save time and money by making it easy to deploy, monitor, control and optimize your IT infrastructure through a single, simple management console. The ICE-LX suite supports Linux-based servers and management consoles
  - HP ProLiant Onboard Administrator Powered Lights-Out 100i with optional LO100i Advanced Licenses for Virtual KVM and Virtual Media.
  - The HP ProLiant Easy Set-up CDs and ISO image downloads offer Assisted and Manual single server installation, setup, and deployment capability. Capabilities provided are:
    - AutoRun
    - Assisted Installation Microsoft Windows 2003 Server and Microsoft Windows 2008 Server
    - OS and SW available for Manual Installation are listed on each servers' QuickSpecs
- Deployment/Serviceability:
  - Easy chassis entry and component access
  - Customer Self Repair (CSR): HP products are designed with many CSR parts to minimize repair time and allow for greater flexibility in performing defective parts replacement
  - HP ProLiant 100 series Server Set-up and Deployment software tools:
    - The HP ProLiant Easy Set-up CDs offer Assisted and Manual single server installation, setup, and deployment capability. Capabilities provided are:
      - AutoRun
      - Assisted Installation Microsoft Windows 2003 Server and Microsoft Windows 2008 Server.
      - Operating System and Software available for Manual Installation are listed on each servers' QuickSpecs

        - Array Configuration Utility (ACU)
        - Array Diagnostics Utility (ADU)
        - HP Insight Diagnostics
- Operating System:
    - Supports Windows, RHEL, SLES and XenServer (Retail)
- Warranty:
    - This product is covered by a global limited warranty and supported by HP Services and a worldwide network of HP Authorized Channel Partners. Hardware diagnostic support and repair is available for one year from date of purchase. Support for software and initial setup is available for 90 days from date of purchase. Enhancements to warranty services are available through HP Care Pack services or customized service agreements. SATA hard drives have a one year warranty.
      NOTE: Server Warranty includes 1 year Parts, 1 year Labor, 1-year on-site support with next business day response. Warranty repairs may be accomplished through the use of Customer Self Repair (CSR) parts. These parts fall into two categories: 1) Mandatory CSR parts are designed for easy replacement. A travel and labor charge will result when customers decline to replace a Mandatory CSR part; 2) Optional CSR parts are also designed for easy replacement but may involve added complexity. Customers may choose to have HP replace Optional CSR parts at no charge. Additional information regarding worldwide limited warranty and technical support is available at:
      http://h18004.www1.hp.com/products/servers/platforms/warranty/index.html

Processor One of the following depending on configuration	Quad-Core Processors Intel® Xeon® Processor E5540 (2.53 GHz, 8MB L3 Cache, 80W, DDR3-1066, HT, Turbo 1/1/2/2) NOTE: Available through Configure To Order only. See Factory Integration Models section for more details Intel® Xeon® Processor E5530 (2.40 GHz, 8MB L3 Cache, 80W, DDR3-1066, HT, Turbo 1/1/2/2) NOTE: Available through Configure To Order only. See Factory Integration Models section for more details Intel® Xeon® Processor E5520 (2.26 GHz, 8MB L3 Cache, 80W, DDR3-1066, HT, Turbo 1/1/2/2) Intel® Xeon® Processor E5506 (2.13 GHz, 4MB L3 Cache, 80W, DDR3-800) NOTE: Available through Configure To Order only. See Factory Integration Models section for more details Intel® Xeon® Processor E5504 (2.00 GHz, 4MB L3 Cache, 80W, DDR3-800) Dual-Core Processors Intel® Xeon® Processor E5502 (1.86 GHz, 4MB L3 Cache, 80W, DDR3-800) NOTE: HT indicates that the processor model supports Intel® Hyper-Threading Technology. NOTE: Turbo indicates the maximum potential frequency increment when using Intel® Turbo Boost Technology, with 4, 3, 2, and 1 cores active. NOTE: DDR3 speed is the maximum memory speed of the processor. Actual memory speed may depend on the quantity and type of DIMMs installed. NOTE: For the Intel 5500 Series, the letter preceding the model number indicates the performance/wattage of the processor. "X" denotes High Performance/Wattage; "E" denotes Enterprise Performance/Wattage (Mainstream); and "L" denotes Lower Wattage.
Cache Memory One of the following depending on configuration	Integrated 1 x 8MB level 3 cache (E5540, E5530, E5520 sequence) Integrated 1 x 4MB level 3 cache (E5506, E5504, E5502 sequence)
Upgradeability	Upgradeable to two processors (dual or quad-core) NOTE: Please contact your regional sales support.
Chipset	Intel® 5500 Chipset

Standard Features

Memory	Type	DDR3 Registered (RDIMM) or Unbuffered (UDIMM)
	Standard (Entry/Base Models)	2 GB
	Standard (Performance Models)	4 GB
	Maximum (RDIMM)	48 GB (12 x 4 GB) for Registered Memory configurations
	Maximum (UDIMM)	24 GB (12 x 2 GB) for Unbuffered Memory configurations

NOTE: Depending on the memory configuration and processor model the memory speed may run at 1066MHz or 800MHz. See the Online Memory Configuration Tool for details: http://www.hp.com/go/ddr3memory-configurator.

DDR3 memory options part number decoder

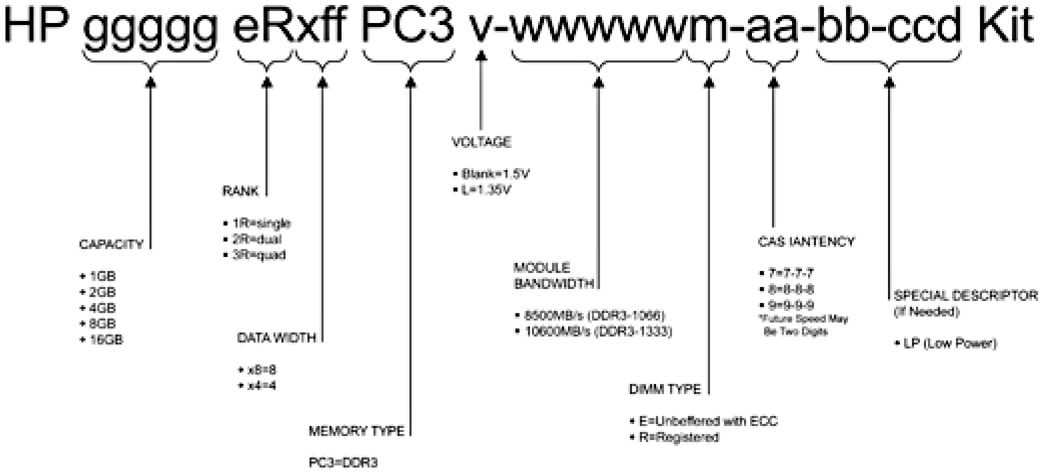
HP ggggg eRxff PC3 v-wwwwwm-aa-bb-ccd Kit
VOLTAGE
• Blank=1.5V
• L=1.35V
RANK
• 1R=single
• 2R=dual
• 3R=quad
CAPACITY
• 1GB
• 2GB
• 4GB
• 8GB
• 16GB
MODULE BANDWIDTH
• 8500MB/s (DDR3-1066)
• 10600MB/s (DDR3-1333)
CAS IANTENCY
• 7=7-7-7
• 8=8-8-8
• 9=9-9-9
*Future Speed May Be Two Digits
SPECIAL DESCRIPTOR (If Needed)
• LP (Low Power)
DATA WIDTH
• x8=8
• x4=4
DIMM TYPE
• E=Unbuffered with ECC
• R=Registered
MEMORY TYPE
PC3=DDR3

Network Controller	Embedded HP NC107i PCI Express Gigabit Server Adapter

Expansion Slots #	Technology	Bus Width	Connector Width	Bus Number*	Form Factor	Notes
1	32-bit/33MHz PCI	N/A	N/A	1	Full length, full height slot	Non Hot-plug
2	PCI-Express (Gen 1)	x4	x8	2	Full length, full height slot	Non Hot-plug
3	PCI-Express (Gen 2)	x4	x8	7	Full length, full height slot	Non Hot-plug
4	PCI-Express (Gen 2)	x16	x16	5	Full length, full height slot	Non Hot-plug
5	PC-Express (Gen 2)	x4	x8	6	Full length, full height slot	Non Hot-plug

Storage Controller	Entry Model	HP Smart Array B110i SATA RAID Controller (RAID 0,1,10) NOTE: To enable RAID for HP Smart Array B110i SATA controller, use EZ set-up CD to download driver, hpahcisr.sys, part of EZ Set-up CD For more information go to www.hp.com/go/SWRaid. NOTE: SA B110i SATA RAID Controller ships standard with every server.
	Base Model	HP Smart Array P410/Zero Memory RAID Controller (RAID 0,1std)
	Performance Model	HP Smart Array P410/256MB RAID Controller (RAID 0/1/1+0/5/5+0)

Storage	Diskette Drive	None ships standard
	Optical Drive	HP Half-Height SATA DVD-ROM Optical Drive ships standard
	Hard Drive	Performance and Base Models (Hot Plug): None ships standard Entry Model (Non-Hot Plug): 1x160GB NHP SATA Drive NOTE: Support for additional 4 LFF SAS/SATA hot plug drive requires 2nd hot-plug hard disk drive cage, 750W CS HE Power Supply, Redundant Power Supply Enablement Kit and HP Smart Array P410 Controller (if not already part of the configuration)

Maximum Internal Storage	SATA	8.0TB (8 x 1TB 3.5") SATA
	SAS	8.0TB (8 x 1TB 3.5") SAS
	NOTE: HP Smart Array B110i SATA RAID controller support for a single logical drive is limited to 2TB. NOTE: Support for more than 4 hard drives requires the purchase of one (1) Hot-plug hard drive cage (P/N: 487737-B21), one (1) HP 750W CS HE Power Supply (P/N: 512327-B21), one (1) Redundant Power Supply Enablement Kit (P/N: 508544-B21) and HP Smart Array P410 Controller (if not already part of the configuration). NOTE: HP NHP Internal SAS/SATA 4 Port Cable Kit (487734-B21) is required when adding Smart Array P410 Controller on Non-Hot Plug SATA/SAS server models.	

Interfaces	Parallel	0
	Serial	1
	Pointing Device (Mouse, PS2)	1
	Graphics	1
	Keyboard (PS2)	1
	USB 2.0 Ports	8 (4 Rear, 2 Front, and 2 Internal)
	NOTE: 1 Dedicated USB port available for internal USB tape connectivity NOTE: Please see the following URL for additional information regarding USB support http://h18004.www1.hp.com/products/servers/platforms/usb-support.html	
	Network RJ-45 (Ethernet)	1 (10/100/1000 bits/s)
	Remote Management	HP ProLiant Onboard Administrator (powered by the HP Integrated Lights-Out 100i Baseboard Management Controller)

Graphics	32MB shared supporting 1600x1200x16M resolution

Standard Features

Form Factor	Tower (5U) NOTE: Rack mounting available via HP Tower to Rack Conversion Tray, Universal Kit. Please see the options section in this QuickSpecs.
Industry Standard Compliance	ACPI V2.0 compliant PCI 2.3 compliant PXE Support WOL Support Microsoft® Logo certifications
Manageability	HP ProLiant Onboard Administrator (powered by the HP Integrated Lights-Out 100i Baseboard Management Controller) with optional LO100i Advanced Licenses for Virtual KVM and Virtual Media. Embedded IPMI standard reporting Easy Set-up CD and ISO Image Web downloads Array Configuration Utility (ACU) Array Diagnostics Utility (ADU) HP Insight Diagnostics HP Insight Management Agents and Insight Management Providers for Systems Insight Manager (SIM) Integration
Security	Power-on password Setup password Diskette boot control Secure Sockets Layer (SSL) Secure Shell (SSH)
Security - Trusted Platform Module	The TPM (Trusted Platform Module) is a microcontroller chip that can securely store artifacts used to authenticate the server platform. These artifacts can include passwords, certificates and encryption keys. Windows® BitLocker™ Drive Encryption (BitLocker) is a data protection feature available in Windows Server® 2008. BitLocker leverages the enhanced security capabilities of a Trusted Platform Module (TPM) version 1.2. The TPM works with BitLocker to help protect user data and to ensure that a server running Windows Server 2008 has not been tampered with while the system was offline. NOTE: For more information about TPM, including a white paper, go to: www.hp.com/go/TPM NOTE: ProLiant OS pre-installed units will come with the partition required for TPM deployment. NOTE: The TPM key is unique to every TPM deployed server and must be retained. Misplacing or losing the key could result in data loss.
Server Power Cord	One Lowline NEMA power cord

Power Supply	Standard: 460W Non-Hot Plug, Non redundant Power Supply (70% efficiency) Optional: 750W CS HE Gold Hot Plug Power Supply (92% efficiency) NOTE: The installation of the optional 750W Redundant Power Supply requires a HP Redundant Power Supply Enablement Kit (P/N 508544-B21). NOTE: Two (2) 750W Redundant Power Supply units and one (1) RPS enablement kit (P/N 508544-B21) are required to achieve redundancy. NOTE: The 2nd hot plug hard disk drive cage requires the purchase of 750W Redundant Power Supply, Redundant Power Supply Enablement Kit and HP Smart Array P410 Controller (if not already part of the configuration)	
System Fans	Two (2) - Non-hot plug, Non-redundant system fans Optional redundant system fan	
Embedded Systems Management	HP ProLiant Onboard Administrator and LO100i Advanced	HP ProLiant Onboard Administrator (powered by LO100i Lights-Out 100 Baseboard Management Controller) with Optional LO100i Advanced Licenses for Virtual KVM and Virtual Media. Features: ● Embedded IPMI standard reporting ● System event log access ● Remote Serial console (serial redirection) ● Browser, Telnet access ● SMASH-CLP compliant ● IPMI 2.0 compliant ● Secure Socket Layer Encryption ● Secure Shell Encryption ● Virtual media (Floppy, CD, USB 2.0) with Advanced License ● Virtual KVM with Advanced License NOTE: For more information, please refer to the QuickSpecs for the LO100i found at: www.hp.com/go/lo100
Operating Systems and Virtualization Software Support for ProLiant Servers	Microsoft Windows Server Hyper V Red Hat Enterprise Linux (RHEL) SUSE Linux Enterprise Server (SLES) HP Citrix XenServer NOTE: For more information on HP's Certified and Supported ProLiant Servers for OS and Virtualization Software and latest listing of software drivers available for your server, please visit our Support Matrix at: http://www.hp.com/go/supportos and our driver download page http://www.hp.com/support/ML150G6	

Standard Features

Factory Express Portfolio for Servers and Storage

HP Factory Express offers configuration, customization, integration and deployment services for HP servers and storage products. Customers can choose how their factory solutions are built, tested, integrated, shipped and deployed.

Factory Express offers service packages for simple configuration, racking, installation, complex configuration and design services as well as individual factory services, such as image loading, asset tagging and custom packaging to meet customer needs. HP products supported through Factory Express include a wide array of servers and storage: HP Integrity, HP ProLiant & HP ProLiant Server Blades, HP BladeSystem, HP 9000 servers as well as the MSAxxxx, VA7xxx, EVA, XP, rackable tape libraries and configurable network switches.

For more information on Factory Express services on your specific server model please contact your sales representative or go to: http://www.hp.com/go/factory-express.

HP Enterprise Configurator

The HP eConfigure Enterprise Configurator now provides factory default racking for our HP hardware portfolio. This approach is aligned with our strategic direction to meet the needs and expectations of our valued customers. If you require "custom" rack configuration, please contact HP's Customer Business Center or an Authorized Partner for assistance.

Service and Support

HP Care Pack Services provide total care and support expertise with committed response designed to meet your IT and business needs.

HP Care Pack services include coverage for the HP branded hardware options qualified for the server that are purchased at the same time or afterward and internal to the enclosure. It also includes the 22" and smaller external monitors and tower UPS options up to 3kVA. These items will be covered at the same service level and for the same coverage period as the server. Coverage of UPS Battery is not included and standard warranty terms & conditions apply. For servers or storage systems installed within a rack, service also covers all HP qualified rack options installed within the same rack.

To fully capitalize on your HP ProLiant servers' capabilities requires a service partner who thoroughly understands your server technology and systems environment. HP Services, an industry leader in provision of multi vender support solutions provides a range of support services designed to meet the varying needs of business. Whether an SMB or large global corporation HP has a ProLiant server support offer to help you speedily deploy and maximize system uptime.

Recommended Service - Simplify ProLiant solution implementation, maintenance and management.

- Support Service - 3 Year, 9x5 Next Business Day coverage, excluding HP holidays only
- Deployment Service - Hardware Installation only

Enhanced Service - Optimize service level to increase IT performance and availability

- Support Service - 3 Year 13x5 Same Business Day, 4-Hour response coverage
- Deployment Service - Installation and Start-up only

Installation & Start-Up of a ProLiant server and Microsoft or Linux O/S per the Customer Description and/or Data Sheet. To be delivered on a scheduled basis 8am-5pm, M-F, excl. HP holidays.

For a complete listing of service offerings and information visit:
http://www.hp.com/services/proliantservices

http://www.hp.com/go/proliant/carepack

SAS/SATA Hot Plug Models

NOTE: The following Performance and Base hot -plug models can support up to 4 hard drives only. Support for more than 4 hard drives (maximum 8 hard drive support on this server) require the purchase of one (1) Hot-plug hard drive cage (P/N: 487737-B21), one (1) HP 750W CS HE Power Supply (P/N: 512327-B21), and one (1) Redundant Power Supply Enablement Kit (P/N: 508544-B21).

Performance Model HP ML150G6 E5520 2.26 GHz, 4GB, SAS/SATA Performanace server (1P) 466133-001	Processor	Intel® Xeon® Processor E5520 (2.26 GHz, 8MB L3 Cache, 80W, DDR3-1066, HT, Turbo 1/1/2/2)
	Cache Memory	Integrated 1x 8 MB L3 cache
	Memory	4 GB (2 x 2 GB) PC3-10600E Unbuffered Advanced ECC memory
	Network Controller	Embedded HP NC107i PCI Express Gigabit Server Adapter
	Storage Controller	HP Smart Array P410 controller w/256MB cache Raid Controller (RAID 0/1/1+0/5/5+0)
	Hard Drive	None ships standard
	Internal Storage	SAS: 4.0TB (4 x 1TB 3.5") Maximum SATA: 4.0TB (4 x 1TB 3.5") Maximum
	Power Supply	460W Non-Hot Plug, Non-Redundant Power Supply (70% efficiency)
	Optical Drive	HP Half-Height SATA DVD-ROM Optical Drive
	Form Factor	5U Tower

Base Model HP ML150G6 E5504 2.0GHz, 2GB, SAS/SATA Base server (1P) 466132-001	Processor	Intel® Xeon® Processor E5504 (2.00 GHz, 4MB L3 Cache, 80W, DDR3-800)
	Cache Memory	Integrated 1 x 4 MB L3 cache
	Memory	2 GB (1 x 2GB) PC3-10600E Unbuffered Advanced ECC memory
	Network Controller	Embedded HP NC107i PCI Express Gigabit Server Adapter
	Storage Controller	HP Smart Array P410 controller w/ Zero Memory cache Raid Controller (RAID 0,1, 0+1)
	Hard Drive	None ships standard
	Internal Storage	SAS: 4.0TB (4 x 1TB 3.5") Maximum SATA: 4.0TB (4 x 1TB 3.5") Maximum
	Power Supply	460W Non-Hot Plug, Non-Redundant Power Supply (70% efficiency)
	Optical Drive	HP Half-Height SATA DVD-ROM Optical Drive
	Form Factor	5U Tower

Models

SATA Non-Hot Plug Models

NOTE: The following Entry non-hot plug model can support up to 4 hard drives only. Support for more than 4 hard drives (maximum 8 hard drive support on this server) require the purchase of one (1) Hot-plug hard drive cage (P/N: 487737-B21), one (1) HP 750W CS HE Power Supply (P/N: 512327-B21), one (1) Redundant Power Supply Enablement Kit (P/N: 508544-B21) and HP Smart Array P410 Controller with HP NHP Internal SAS/SATA 4 Port Cable Kit (487734-B21).

NOTE: A hot-plug hard drive cage can be installed into a non-hot plug server by ordering one (1) hot-plug hard disk drive cage option kit (P/N 487737-B21) and a Smart Array P410 controller.

Entry Model	Processor(s)	Intel® Xeon® Processor E5502 (1.86 GHz, 4MB L3 Cache, 80W, DDR3-800)
HP ML150G6 E5502 1.86 GHz DC, 2GB NHP SATA (1P) 466131-001	Cache Memory	Integrated 1 x 4 MB L3 cache
	Memory	2 GB (1 x 2GB) PC3-10600E Unbuffered Advanced ECC memory
	Network Controller	Embedded HP NC107i PCI Express Gigabit Server Adapter
	Storage Controller	HP Smart Array B110i SATA RAID Controller (RAID 0,1,10)
	Hard Drive	One 160GB Non-Hot Plug SATA HDD
	Internal Storage	SATA: 4.0TB (4 x 1 TB 3.5") Maximum
	Power Supply	460W Non-Hot Plug, Non-Redundant Power Supply (70% efficiency)
	Optical Drive	HP Half-Height SATA DVD-ROM Optical Drive
	Form Factor	5U Tower

Smart Buys

The ProLiant Smart Buy program offers a collection of promotional server and option products that are configured with SMB in mind, offered at discounted prices, and positioned for quick delivery. Smart Buy server offers are available for a limited time only.

HP S-Buy ML150G6 E5504 250GB 2G 518174-005	Processor(s)	(1) Intel® Xeon® Processor E5504 (2.00 GHz, 80W, DDR3-800)
	Cache Memory	4MB Level 3 Cache
	Memory	HP 2GB UDIMM (1x2GB) 2Rx8 PC3-10600E-9 Kit
	Network Controller	Embedded HP NC107i PCI Express Gigabit Server Adapter
	Storage Controller	HP Smart Array B110i SATA RAID Controller (RAID 0,1,10)
	Hard Drive	One (1) HP 250GB SATA 7.2K NHP 3.5" MDL HDD
	Internal Storage	SATA: 4.0TB (4 x 1 TB) Maximum
	Power Supply	460W Non-Hot Plug Power Supply
	Optical Drive	HP Half-Height SATA DVD-ROM Drive
	Form Factor	Tower (5U)

HP S-Buy ML150G6 E5506 250GB 2G 518175-005	Processor(s)	(1) Intel® Xeon® Processor E5506 (2.13 GHz, 80W, DDR3-800)
	Cache Memory	4MB Level 3 Cache
	Memory	HP 2GB UDIMM (1x2GB) 2Rx8 PC3-10600E-9 Kit
	Network Controller	Embedded HP NC107i PCI Express Gigabit Server Adapter
	Storage Controller	HP Smart Array B110i SATA RAID Controller (RAID 0,1,10)
	Hard Drive	HP 250GB SATA 7.2K NHP 3.5" MDL HDD
	Internal Storage	SATA: 4.0TB (4 x 1 TB) Maximum
	Power Supply	460W Non-Hot Plug Power Supply
	Optical Drive	HP Half-Height SATA DVD-ROM Drive
	Form Factor	Tower (5U)

HP S-Buy ML150G6 E5506 2x250GB 4G 518176-005	Processor(s)	(1) Intel® Xeon® Processor E5506 (2.13 GHz, 80W, DDR3-800)
	Cache Memory	4MB Level 3 Cache
	Memory	4GB UDIMM (2x2GB) (2x HP 2GB 2Rx8) PC3-10600E-9 Kit
	Network Controller	Embedded HP NC107i PCI Express Gigabit Server Adapter
	Storage Controller	HP Smart Array B110i SATA RAID Controller (RAID 0,1,10)
	Hard Drive	(2) HP 250GB 3G SATA 7.2K NHP 3.5" MDL HDD, supports up to 4LFF HDD
	Internal Storage	SATA: 4.0TB (4 x 1 TB) Maximum
	Power Supply	460W Non-Hot Plug Power Supply
	Optical Drive	HP Half-Height SATA DVD-ROM Drive
	Form Factor	Tower (5U)
	Operating System	Microsoft Small Business Server 2008

Configuration Information - Factory Integrated Models

NOTE: This section lists some of the steps required to configure a Factory Integrated Model. To ensure only valid configurations are ordered, HP recommends the use of an HP approved configurator. Contact your local sales representative for information on CTO product offerings and requirements.
NOTE: HP does not allow factory integration of options into standard models listed above.
Configure-to-order servers must start with a CTO Chassis.

Step 1: Base Configuration

Models	HP ProLiant ML150 G6 CTO Chassis	487912-B21
	Factory Integrated Models ship with:	
	Embedded NC107i Embedded B110i SATA RAID PCA Easy Set up CD Keyboard and Mouse Power Cord Tower 5U Form Factor	

Step 2: Choose Required Options (Select only one option from each category unless otherwise noted)

Processors	Quad-Core Processor	
	Intel® Xeon® Processor E5540 (2.53 GHz, 8MB L3 Cache, 80W, DDR3-1066, HT, Turbo 1/1/2/2), FIO	507849-L21
	Intel® Xeon® Processor E5530 (2.40 GHz, 8MB L3 Cache, 80W, DDR3-1066, HT, Turbo 1/1/2/2), FIO	507848-L21
	Intel® Xeon® Processor E5520 (2.26 GHz, 8MB L3 Cache, 80W, DDR3-1066, HT, Turbo 1/1/2/2), FIO	507722-L21
	Intel® Xeon® Processor E5506 (2.13 GHz, 4MB L3 Cache, 80W, DDR3-800), FIO	507847-L21
	Intel® Xeon® Processor E5504 (2.00 GHz, 4MB L3 Cache, 80W, DDR3-800), FIO	507721-L21
	Dual-Core Processor	
	Intel® Xeon® Processor E5502 (1.86 GHz, 4MB L3 Cache, 80W, DDR3-800), FIO	507720-L21

Configuration Information - Factory Integrated Models

Memory	Registered DIMMs (RDIMMs)	
	HP 2GB 2Rx8 PC3-10600R-9 Kit	500656-B21
	HP 4GB 2Rx4 PC3-10600R-9 Kit	500658-B21
	HP 4GB 4Rx8 PC3-8500R-7 LP Kit	500660-B21
	Unbuffered DIMMs (UDIMMs)	
	HP 1GB 1Rx8 PC3-10600E-9 Kit	500668-B21
	HP 2GB 2Rx8 PC3-10600E-9 Kit	500670-B21
	NOTE: All DDR3 memory option kits consist of one DIMM per kit. For detailed memory configuration rules and guidelines, please use the Online DDR3 Memory Configuration Tool: www.hp.com/go/ddr3memory-configurator. NOTE: Kits described as LP include Low Power DIMMs. For more information on ProLiant Energy Efficient Features, see: www.hp.com/go/proliant-energy-efficient	
Optical Drives	HP Half-Height SATA DVD-ROM Optical Drive	447326-B21
	HP Half-Height SATA DVD RW Optical Drive	447328-B21
Hard Drive Cage	NHP HDD model: Non-hot plug hard disk drive cage FIO kit NOTE: If non-hot plug drive cage is selected, then at least one non-hot plug SATA or SAS hard drive must be selected. NOTE: Non-hot plug drive cage only supports non-hot plug drives.	500448-B21
	HP HDD model: Hot-plug hard disk drive cage option FIO kit NOTE: Hot-plug drive cage only supports hot-plug drives. NOTE: Support for more than 4 hard drives requires the purchase of one (1) Hot-plug hard drive cage (P/N: 487737-B21), one (1) HP 750W CS HE Power Supply (P/N: 512327-B21), one (1) Redundant Power Supply Enablement Kit (P/N: 508544-B21) and HP Smart Array P410 Controller (if not already part of the configuration) NOTE: HP NHP Internal SAS/SATA 4 Port Cable Kit (487734-B21) is required when adding Smart Array P410 Controller to a non-hot plug SATA server model.	487737-B21
Hard Drives	NOTE: The components of a storage subsystem (e.g. the drive, the HBA/controller, and the server backplane) should operate at the same data transfer rate or the system bandwidth will be negotiated down to an acceptable level for all components. NOTE: Mixing SAS and SATA hard drives is allowed. However, only SAS hard drives will be used for RAID setting.	
	SAS Non-Hot Plug 3.5" Enterprise (ENT) Drives	
	HP 400GB 3G 10K 3.5" DP SAS ENT HDD	508232-B21
	HP 450GB 3G 15K 3.5" DP SAS ENT HDD	454234-B21
	HP 300GB 3G 15K 3.5" DP SAS ENT HDD	417950-B21
	HP 146GB 3G 15K 3.5" DP SAS ENT HDD	417855-B21
	NOTE: SAS hard drives require a SAS HBA or Smart Array Controller.	
	SATA Non-Hot Plug 3.5" Entry (ETY) Drives	
	HP 160GB 3G SATA 7.2K NHP 3.5" ETY HDD	458947-B21
	SATA Non-Hot Plug 3.5" Midline (MDL) Drives	
	HP 750GB 3G SATA 7.2K NHP 3.5" MDL HDD	462595-B21

	HP 500GB 3G SATA 7.2K NHP 3.5" MDL HDD	458941-B21
	HP 250GB 3G SATA 7.2K NHP 3.5" MDL HDD	458939-B21

Power Supplies	Power Supplies	
	460W Non-Hot Plug, Non Redundant Power Supply, FIO	500447-B21
	750W CS HE Gold Hot Plug Power Supply NOTE: 750W RPS requires one (1) RPS Enablement Kit 5U G6 (P/N 508544-B21).. NOTE: Two (2) 750W PSUs and one (1) RPS enablement kit are required to achieve redundancy. NOTE: The 2nd hot plug hard disk drive cage requires the purchase of 750W Redundant Power Supply, Redundant Power Supply Enablement Kit and HP Smart Array P410 Controller (if not already part of the configuration).	512327-B21
	Power Options	
	HP Redundant Power Supply Enablement Kit	508544-B21

Step 3: Choose Additional Factory Integratable Options (Select only one option from each category unless otherwise noted)

Storage Controllers	SAS Controller	
	Smart Array P212 Controller	
	HP Smart Array P212/Zero Memory (ZM) Controller	462828-B21
	HP Smart Array P212/256 MB Controller	462834-B21
	HP P212 /256 MB FIO SA Cntrlr w/Battery	491191-B21
	Smart Array P410 Controller	
	HP Smart Array P410/256 MB Controller	462862-B21
	HP Smart Array P410/Zero Memory ZM FIO Controller	462860-B21
	HP Smart Array P410/256 MB FIO Cntrlr w/Battery	491195-B21
	HP Smart Array P410/512 MB with BBWC Controller	462864-B21
	NOTE: To support RAID 5, HP P410 requires at least 256MB Cache NOTE: To support RAID 6, HP P410 requires at least 256MB Cache + Battery + SAAP or 512MB BBWC + Smart Array Advanced Pack (SAAP) license key. Smart Array P411 Controller.	
	Smart Array P411 Controller	
	HP Smart Array P411/256 MB Controller	462830-B21
	HP Smart Array P411/256 MB FIO Controller w/Battery	491193-B21
	HP Smart Array P411/512 MB BBWC Controller	462832-B21
	Optional Upgrades	
	256 MB Cache Upgrade NOTE: Supported HP Smart Array P212 Controller only.	462968-B21
	512MB BBWC NOTE: Supported on HP Smart Array P410 Controller and HP Smart Array P411 Controller only.	462967-B21

Battery Kit upgrade NOTE: To enable BBWC on the 256MB cache. NOTE: Supported on HP Smart Array P212 Controller, HP Smart Array P410 Controller, and HP Smart Array P411 Controller only.	462969-B21
HP Smart Array Advanced Pack No Media 1-Server license including 1yr 24x7 Technical Support NOTE: Smart Array Advanced Pack (SAAP) is a license key to activate RAID 6 and the advance feature sets provided by the controller. This part number (516471-B21) can be used to purchase a single SAAP license or to order multiple licenses with a single activation key. Customers will receive a license entitlement certificate via e-mail. The license entitlement certificate must be redeemed online or via fax in order to obtain the license activation key(s). Include one year of 24x7 HP Software Technical Support Services.	516471-B21
SCSI HBA	
HP SC11Xe U320 PCI-E Host Bus Adapter NOTE: Recommended HBA for SCSI tape drive connection.	412911-B21

Step 4: Choose Additional Options for Factory Integration

NOTE: For additional options, please refer to the "Core Options" and "Additional Options" sections below.

Core Options

NOTE: Some options may not be available for factory integration. Please contact an HP sales representative for additional information.

Processors	Quad-Core Processors	
	Intel® Xeon® Processor E5540 (2.53 GHz, 8MB L3 Cache, 80W, DDR3-1066, HT, Turbo 1/1/2/2)	507849-B21
	Intel® Xeon® Processor E5530 (2.40 GHz, 8MB L3 Cache, 80W, DDR3-1066, HT, Turbo 1/1/2/2)	507848-B21
	Intel® Xeon® Processor E5520 (2.26 GHz, 8MB L3 Cache, 80W, DDR3-1066, HT, Turbo 1/1/2/2)	507722-B21
	Intel® Xeon® Processor E5506 (2.13 GHz, 4MB L3 Cache, 80W, DDR3-800)	507847-B21
	Intel® Xeon® Processor E5504 (2.00 GHz, 4MB L3 Cache, 80W, DDR3-800)	507721-B21
	Dual-Core Processor	
	Intel® Xeon® Processor E5502 (1.86 GHz, 4MB L3 Cache, 80W, DDR3-800)	507720-B21
Memory	Registered DIMMs (RDIMMs)	
	HP 2GB 2Rx8 PC3-10600R-9 Kit	500656-B21
	HP 4GB 2Rx4 PC3-10600R-9 Kit	500658-B21
	HP 4GB 4Rx8 PC3-8500R-7 LP Kit	500660-B21
	Unbuffered DIMMs (UDIMMs)	
	HP 1GB 1Rx8 PC3-10600E-9 Kit	500668-B21
	HP 2GB 2Rx8 PC3-10600E-9 Kit	500670-B21
	NOTE: All DDR3 memory option kits consist of one DIMM per kit. For detailed memory configuration rules and guidelines, please use the Online DDR3 Memory Configuration Tool: www.hp.com/go/ddr3memory-configurator. NOTE: Kits described as LP include Low Power DIMMs. For more information on ProLiant Energy Efficient Features, see: www.hp.com/go/proliant-energy-efficient	
Optical Drives	HP Half-Height SATA DVD-ROM Optical Drive	447326-B21
	HP Half-Height SATA DVD RW Optical Drive	447328-B21
Hard Drive Cage	Hot-plug hard drive disk cage option kit NOTE: A 2nd hot-plug hard disk drive cage option kit is needed to support more than 4 hard drives.	487737-B21
Hard Drives	NOTE: The components of a storage subsystem (e.g. the drive, the HBA/controller, and the server backplane) should operate at the same data transfer rate or the system bandwidth will be negotiated down to an acceptable level for all components. NOTE: Transfer rates of drives are dependent on the maximum transfer rate supported by the HBA or Controller. Refer to the HBA or Controller technical specifications for details. NOTE: Mixing SAS and SATA hard drives is allowed. However, only SAS hard drives will be used for RAID setting.	

SATA Hot Plug 3.5" Midline (MDL) Drives	
HP 1TB 3G SATA 7.2K 3.5" MDL HDD	454146-B21
HP 750GB 3G SATA 7.2K 3.5" MDL HDD	458930-B21
HP 500GB 3G SATA 7.2K 3.5" MDL HDD	458928-B21
HP 250GB 3G SATA 7.2K 3.5" MDL HDD	458926-B21
SATA Non-Hot Plug 3.5" Midline (MDL) Drives	
HP 750GB 3G SATA 7.2K NHP 3.5" MDL HDD	462595-B21
HP 500GB 3G SATA 7.2K NHP 3.5" MDL HDD	458941-B21
HP 250GB 3G SATA 7.2K NHP 3.5" MDL HDD	458939-B21
SATA Non-Hot Plug 3.5" Entry (ETY) Drives	
HP 160GB 3G SATA 7.2K NHP 3.5" ETY HDD	458947-B21
SATA Hot Plug 3.5" Entry (ETY) Drives	
HP 160GB 3G SATA 7.2K 3.5" ETY HDD	458945-B21

NOTE: SATA drives have a 1 year warranty. Please see the QuickSpecs for Technical Specifications and additional information: http://h18000.www1.hp.com/products/quickspecs/13021_na/13021_na.html

NOTE: The previous generations of 1.5G SATA non-hot plug hard drives are supported. These drives can be purchased as an option. However, they can no longer be configurable.

NOTE: SATA drives have a 1 year warranty. Please see the QuickSpecs for Technical Specifications and additional information: http://h18000.www1.hp.com/products/quickspecs/11940_na/11940_na.html

NOTE: SATA drives have a 1 year warranty. Please see the QuickSpecs for Technical Specifications and additional information: http://h18000.www1.hp.com/products/quickspecs/12244_na/12244_na.html

SAS Non-Hot Plug 3.5" Enterprise (ENT) Drives	
HP 450GB 3G NHP 15K 3.5" DP SAS ENT HDD	454234-B21
HP 400GB 3G NHP 10K 3.5" DP SAS ENT HDD	508232-B21
HP 300GB 3G NHP 15K 3.5" DP SAS ENT HDD	417950-B21
HP 146GB 3G NHP 15K 3.5" DP SAS ENT HDD	417855-B21
SAS Hot Plug 3.5" Enterprise (ENT) Drives	
HP 400GB 3G SAS 10K 3.5" DP HDD	459508-B21
HP 450GB 3G SAS 15K 3.5" DP HDD	454232-B21
HP 300GB 3G SAS 15K 3.5" DP HDD	416127-B21
HP 146GB 3G SAS 15K 3.5" DP HDD	384854-B21
HP 72GB 3G SAS 15K 3.5" DP HDD	384852-B21

NOTE: SAS hard drives require a SAS HBA or Smart Array Controller.

SAS Hot Plug 3.5" Midline (MDL) Drives	
HP 1TB 7.2K 3.5" DP SAS MDL HDD	461137-B21
HP 750GB 7.2K 3.5" DP SAS MDL HDD	461135-B21

NOTE: Please see the QuickSpecs for Technical Specifications and additional information: http://h18000.www1.hp.com/products/quickspecs/12244_na/12244_na.html

Communications	Communications	
	HP NC112T PCIe Gigabit Server Adapter	503746-B21
	HP NC360T PCI Express Dual Port Gigabit Server Adapter	412648-B21
	HP NC364T PCI Express Quad Port Gigabit Server Adapter	435508-B21
	HP NC373F PCI Express Multifunction Gigabit Server Adapter	394793-B21
	HP NC373T PCI Express Multifunction Gigabit Server Adapter	394791-B21
	HP NC382T PCIe Dual Port Multifunction Gigabit Server Adapter	458492-B21
	NOTE: Please see the QuickSpecs for Technical Specifications and additional information: www.hp.com/go/ProLiantNICs	
Power Supplies	Power Supplies	
	750W CS HE Gold Hot Plug Power Supply NOTE: 750W RPS requires a Redundant Power Supply Enablement Kit 5U G6 (P/N 508544-B21). Two (1) 750W PSUs and one (1) RPS enablement kit are required to achieve redundancy.	512327-B21
	Power Options	
	HP Redundant Power Supply Enablement Kit	508544-B21
	HP 5U G6 Redundant fan kit NOTE: Option Kits contain optional power supply, an IEC power cable and PDU IEC cables.	513927-B21

Additional Options

Remote Management	HP LO100i Advanced Pack, No Media 1-Server License including 1 year of 24x7 Technical Support and Updates NOTE: Other license types available, please check LO100i Advanced QuickSpecs at: http://www.hp.com/go/lo100 for more details.	530521-B21
Port Options	HP NHP Internal SAS/SATA 4 Port Cable Kit NOTE: This cable is required when adding Smart Array P410 Controller on Non-Hot Plug SATA/SAS server models.	487734-B21
Security	HP Trusted Platform Module Option Kit	488069-B21
Storage Controllers	SAS Controller	
	Smart Array P212 Controller	
	HP Smart Array P212/Zero Memory Controller	462828-B21
	HP Smart Array P212/256 MB Controller	462834-B21
	Smart Array P410 Controller	
	HP Smart Array P410/256 MB Controller	462862-B21
	HP Smart Array P410/512 MB with BBWC Controller	462864-B21
	NOTE: To support RAID 5, HP P410 requires at least 256 MB Cache. NOTE: To support RAID 6, HP P410 requires at least 256 MB Cache + Battery + SAAP or 512MB BBWC + SAAP.	
	Smart Array P411 Controller	
	HP Smart Array P411/256 MB Controller	462830-B21
	HP Smart Array P411/512 MB BBWC Controller	462832-B21
	Optional Upgrades	
	HP 256 MB P-Series Cache Upgrade NOTE: Supported on HP Smart Array P212 Controller only.	462968-B21
	512MB BBWC NOTE: Supported on HP Smart Array P410 Controller and HP Smart Array P411 Controller only.	462967-B21
	Battery Kit upgrade NOTE: To enable BBWC on the 256MB cache. NOTE: Supported on HP Smart Array P212 Controller, HP Smart Array P410 Controller, and HP Smart Array P411 Controller only.	462969-B21
	HP NHP Internal SAS/SATA 4 Port Cable Kit NOTE: NHP Internal SAS/SATA 4 Port Cable (487734-B21) is required when adding Smart Array P410 Controller on Non-Hot Plug SATA/SAS server models.	487734-B21
	HP Smart Array Advanced Pack No Media 1-Server license including 1yr 24x7 Technical Support NOTE: Smart Array Advanced Pack (SAAP) is a license key to activate RAID 6 and the advance feature sets provided by the controller. This part number (516471-B21) can be used to purchase a single SAAP license or to order multiple licenses with a single activation key. Customers will receive a license	516471-B21

entitlement certificate via e-mail. The license entitlement certificate must be redeemed online or via fax in order to obtain the license activation key(s). Include one year of 24x7 HP Software Technical Support Services.

NOTE: Please see the following QuickSpecs for Technical Specifications and additional information:
http://h18000.www1.hp.com/products/quickspecs/13203_na/13203_na.html (Smart Array P212 Controller)
http://h18000.www1.hp.com/products/quickspecs/13201_na/13201_na.html (Smart Array P410 Controller)
http://h18000.www1.hp.com/products/quickspecs/13202_na/13202_na.html (Smart Array P411 Controller)

SCSI HBA

HP SC11Xe U320 PCI-E Host Bus Adapter	412911-B21

NOTE: Please see the following QuickSpecs for Technical Specifications and additional information:
http://h18000.www1.hp.com/products/quickspecs/12566_na/12566_na.html (SC11Xe HBA)

Tape Storage

NOTE: Installation of SCSI internal tape drives in a ML150 model requires SCSI controller kit (PN 412911-B21).

NOTE: For complete listing of tape drive offerings see:
http://www.hp.com/products1/storage/compatibility/tapebackup/ISS/index.html

Tape Drives

DAT USB Tape Drives

HP StorageWorks DAT 40 USB Internal Tape Drive (Carbonite)	DW022A
HP StorageWorks DAT 72 USB Internal Tape Drive (Carbonite)	DW026A
HP StorageWorks DAT 160 USB Internal Drive	Q1580A

LTO Ultrium Tape Drives

HP StorageWorks LTO-2 Ultrium 448 SAS Internal Tape Drive	DW085A
HP StorageWorks LTO-3 Ultrium 920 SAS Internal Tape Drive	EH847A

Additional Options

Disk-Based Backup	RDX Removable Disk Backup	
	HP RDX160 Internal Removable Disk Backup System NOTE: 160GB of Disk Storage.	AJ765A
	HP RDX320 Internal Removable Disk Backup System NOTE: 320GB of Disk Storage.	AJ767A
	HP RDX500 Internal Removable Disk Backup System NOTE: 500GB of Disk Storage.	AJ934A
	NOTE: Please see the QuickSpecs for Technical Specifications and additional information: http://h18000.www1.hp.com/products/quickspecs/13036_na/13036_na.html	
	D2D Backup	
	HP StorageWorks D2D2504i Backup System	EJ002A
	HP StorageWorks D2D120 Backup System with Data Protector Express Software Kit NOTE: 2TB of Disk Storage.	EH924A
	HP StorageWorks D2D130 Backup System with LTO-3 Ultrium 920 SAS Tape Drive NOTE: 3TB of Disk Storage.	EH952A
	NOTE: Please see the HP D2D Backup Systems QuickSpecs for additional information: http://www.hp.com/go/d2d.	
Uninterruptible Power Systems	HP Tower UPS	
	HP T1000 G3 UPS Models	
	HP T1000 G3 UPS	AF448A
	HP T1500 G3 UPS Models	
	HP T1500 G3 UPS	AF450A
	NOTE: Please see QuickSpecs for Technical Specifications and additional information: http://h18000.www1.hp.com/products/quickspecs/13160_na/13160_na.html	
HP Rack Series	HP Rack 10000 G2 Series (Carbon/Graphite Metallic)	
	10642 G2 (42U) Rack Cabinet 1200mm Deep - Shock Pallet	AF034A
	10642 G2 (42U) Rack Cabinet 1200mm Deep - Pallet	AF038A
	10647 G2 (47U) Rack Cabinet 1200mm Deep - Shock Pallet	AF044A
	10647 G2 (47U) Rack Cabinet 1200mm Deep - Pallet	AF045A
	NOTE: It is mandatory to use a shock pallet when shipping racks with equipment installed.	
	NOTE: Please see the Rack 10000 G2 QuickSpecs for Technical Specifications such as height, width, depth, weight, and color: http://h18000.www1.hp.com/products/quickspecs/12402_na/12402_na.html	
	NOTE: For additional information regarding Rack Cabinets, please see the following URL: http://www.hp.com/go/rackandpower.	

Additional Options

HP Rack Options	HP KVM Switch Options	
	IP Console Switch with Virtual Media (KVM/IP), 2x1x16	AF601A
	IP Console Switch with Virtual Media (KVM/IP), 4x1x16	AF602A
	Server Console Switch with Virtual Media (KVM), 0x2x16	AF600A
	PS2 Virtual Media Interface Adapter, 1 Pack NOTE: The AF604A is only compatible with the Console Switches with Virtual Media.	AF604A
	PS/2 Interface Adapter, 1 pack	262588-B21
	PS/2 Interface Adapter, 8 pack	262587-B21
	NOTE: Cat5e cables are required to connect Interface Adapters to Console Switches. Cat5e cables can be found at the following URL: http://www.hp.com/go/kvm.	
	HP 1x4 Console Switch	AF611A
	HP PS2 Server Console Cable, 6 foot, 2-Pack	AF612A
	HP USB Server Console Cable, 6 foot, 2-Pack NOTE: required for supporting USB peripherals.	AF613A
	NOTE: For additional information regarding KVM switches, Serial Console servers, rack mount monitors, keyboards and all related options please see the following URL: http://www.hp.com/go/kvm.	
	Rack Kits	
	HP Tower to Rack Conversion Tray, Universal Kit	417705-B21
USB Options	HP USB 2-Button Optical Scroll Mouse (Carbonite/Silver)	DC172B
	HP USB 04 Standard Keyboard	DT528A#ABA
	USB Floppy Drive, External	DC361B
	NOTE: For the installation of Windows and other OS's, a floppy drive or the HP USB Floppy Drive Key may be required to complete driver installation. A standard USB drive key may not work to complete driver installation.	
Service and Support Offerings (HP Care Pack Services)	Extended Care	
	Next Business Day On-Site Service, 9-Hour x 5-Day Coverage, 3 Years, Electronic	U8184E
	Committed Care	
	Same Business Day On-Site Service, 4 Hour Response, excluding holidays, 13-Hour x 5-Day Coverage, 3 Years, Electronic	U8192E
	Deployment Services	
	Hardware Installation, Electronic (install services)	U8195E
	NOTE: For more information, customer/resellers can contact: http://www.hp.com/services/carepack.	

Memory

HP ProLiant ML150 G6 Memory Population Guidelines

NOTE: Memory configurations listed do not apply to "Factory Integrated Models".

NOTE: Charts do not represent all possible memory configurations. Memory must be populated in one of the following ways.

For detailed memory configuration rules and guidelines, please use the Online DDR3 Memory Configuration Tool:
www.hp.com/go/ddr3memory-configurator

Some DIMM installation guidelines are summarized below:

- For the HP ProLiant ML150 G6 server with twelve (12) memory slots
- There are three (3) channels per processor; six (6) channels per server
- There are two (2) DIMM slots for each memory channel; twelve (12) total slots
- Memory channel 1 consists of the two (2) DIMMs that are closest to the processor
- Memory channel 3 consists of the two (2) DIMMs that are furthest from the processor
- DIMM slots that are white should be populated first
- Do not mix Unbuffered memory (UDIMMs) with Registered memory (RDIMMs)
- Do not install DIMMs if the corresponding processor is not installed
- If only one processor is installed in a 2CPU system, only half of the DIMM slots are available
- To maximize performance, balance the total memory capacity between all installed processors
- It is not required, but it is recommended to load the channels similarly if possible
- You can only have up to eight (8) ranks installed per channel
- You can only install two quad-rank DIMMs per channel
- You can only install two UDIMMs per channel; if available, the third slot in the channel must remain empty
- Populate DIMMs from heaviest load (quad-rank) to lightest load (single-rank) within a channel
- Heaviest load (DIMM with most ranks) within a channel goes furthest from the chipset
- For memory mirroring mode, channel 3 must be unpopulated. Channels 1 and 2 are populated identically
- For lock-step mode, channel 3 must be unpopulated. DIMMs in channels 1 and 2 will be installed in pairs. The paired slots will be 1,4; 2,5; 3;6 on a 3DPC system or 1,4; 2,5; on a 2DPC system
- No mixing DIMM voltage; all DIMMs must be the same voltage

DIMM Type	Registered DIMMs (RDIMMs)				Unbuffered DIMMs (UDIMMs)			
DIMM Rank	Dual Rank (2R)		Quad Rank (4R)		Single Rank (1R)		Dual Rank (2R)	
DIMM Capacity	2GB	4GB	2GB	4GB	1GB	2GB	1GB	2GB
DIMM Native Speed (MHz)	1333	1333	*	1066	1333	*	*	1333
SLOTS THAT CAN BE POPULATED								
12 slot servers	12	12	*	12	12	*	*	12
MAXIMUM CAPACITY (GB)								
12 slot servers	24	48	*	48	12	*	*	24
POPULATED DIMM SPEED (MHz)								
1 DIMM Per Channel	1333	1333	*	1066	1333	*	*	1333
2 DIMM Per Channel	1066	1066	*	800	1066	*	*	1066
* - not supported by HP at this time.								

NOTES:

- Mixing DIMM speeds is allowed, but the system processor speed rules always override the DIMM capabilities
- If you do mix DIMM speeds, the memory bus will default to the minimum clock rate of all DIMMs in the system - even if the slower DIMM is on the other processor

Memory

- If you install 1x 1066MHz DIMM in channel 1 and 1x 1333MHz DIMM in channel 2, you still run at 1066MHz
- If you install 1x 1066MHz DIMM in channel 1 and 5x 1333MHz DIMMs with 1 DIMM Per Channel (DPC) in each of the other channels, you run at 1066MHz
- If you install 3DPC in one channel (if applicable) and 1DPC in all other channels, you run at 800MHz
- 95 Watt CPU's are required for 1333MHz DIMM speeds
- References to the above MHz speeds are for the various speeds of DDR3 DIMMs; 1333 refers to DDR3-1333, etc.

Standard Memory
All HP ML150 G6 models ship with 12 DIMM sockets.

Factory Integrated Models include the memory capacity of your choice.

Basic memory slot and population diagram

- Population order; start with "A" first, "B" second, "C" third, etc.

12 DIMM SLOTS (6 per CPU node)					
	CPU1		CPU2		
	slot #	population order	slot #	population order	
Chnl 1	1	D	1	D	Chnl 1
	2	A	2	A	
Chnl 2	3	E	3	E	Chnl 2
	4	B	4	B	
Chnl 3	5	F	5	F	Chnl 3
	6	C	6	C	

Standard Memory (1 CPU model)
Hot Plug SAS/SATA performance and base models include 2 x 2 GB UDIMM and 1 x 2 GB UDIMM respectively
Non-Hot Plug SATA entry models include 1 x 2 GB UDIMM

- 4 GB (2 x 2GB) of PC3-10600 (DDR3-1066) Advanced ECC UDIMMs

	CPU1		CPU2		
	slot #	population order	slot #	population order	
Chnl 1	1	D: empty	1	D: empty	Chnl 1
	2	A: 2GB DIMM	2	A: empty	
Chnl 2	3	E: empty	3	E: empty	Chnl 2
	4	B: 2GB DIMM	4	B: empty	
Chnl 3	5	F: empty	5	F: empty	Chnl 3
	6	C: empty	6	C: empty	

Memory

Standard memory plus Optional Memory (1 CPU model)

- 18GB, consisting of three (3) 2GB RDIMMs plus three (3) 4GB RDIMMs)
    - 3x 2GB dual-rank PC3-10600 RDIMMs
    - 3x 4GB dual-rank PC3-10600 RDIMMs

	CPU1		CPU2		
	slot #	population order	slot #	population order	
Chnl 1	1	D: 2GB DIMM	1	D: empty	Chnl 1
	2	A: 4GB DIMM	2	A: empty	
Chnl 2	3	E: 2GB DIMM	3	E: empty	Chnl 2
	4	B: 4GB DIMM	4	B: empty	
Chnl 3	5	F: 2GB DIMM	5	F: empty	Chnl 3
	6	C: 4GB DIMM	6	C: empty	

Standard memory Replaced with Optional Memory (1 CPU model)
RDIMM maximum configuration

- 24GB, consisting of six (6) 4GB dual-rank PC3-10600 RDIMMs

	CPU1		CPU2		
	slot #	population order	slot #	population order	
Chnl 1	1	D: 4GB DIMM	1	D: empty	Chnl 1
	2	A: 4GB DIMM	2	A: empty	
Chnl 2	3	E: 4GB DIMM	3	E: empty	Chnl 2
	4	B: 4GB DIMM	4	B: empty	
Chnl 3	5	I: 4GB DIMM	5	I: empty	Chnl 3
	6	C: 4GB DIMM	6	C: empty	

UDIMM Maximum Configuration (1 CPU model)

- 12GB, consisting of six (6) 2GB dual-rank PC3-10600 UDIMMs

	CPU1		CPU2		
	slot #	population order	slot #	population order	
Chnl 1	1	D: 2GB DIMM	1	D: empty	Chnl 1
	2	A: 2GB DIMM	2	A: empty	
Chnl 2	3	E: 2GB DIMM	3	E: empty	Chnl 2
	4	B: 2GB DIMM	4	B: empty	
Chnl 3	5	F: 2GB DIMM	5	F: empty	Chnl 3
	6	C: 2GB DIMM	6	C: empty	

Standard memory Replaced with Optional Memory (2 CPU model)
RDIMM maximum configuration

- 48GB, consisting of twelve (12) 4GB dual-rank PC3-10600 RDIMMs

	CPU1		CPU2		
	slot #	population order	slot #	population order	
Chnl 1	1	D: 4GB DIMM	1	D: 4GB DIMM	Chnl 1
	2	A: 4GB DIMM	2	A: 4GB DIMM	
Chnl 2	3	E: 4GB DIMM	3	E: 4GB DIMM	Chnl 2
	4	B: 4GB DIMM	4	B: 4GB DIMM	
Chnl 3	5	F: 4GB DIMM	5	F: 4GB DIMM	Chnl 3
	6	C: 4GB DIMM	6	C: 4GB DIMM	

UDIMM maximum configuration (2 CPU model)

- 24GB, consisting of twelve (12) 2GB dual-rank PC3-10600 UDIMMs

	CPU1		CPU2		
	slot #	population order	slot #	population order	
Chnl 1	1	D: 2GB DIMM	1	D: 2GB DIMM	Chnl 1
	2	A: 2GB DIMM	2	A: 2GB DIMM	
Chnl 2	3	E: 2GB DIMM	3	E: 2GB DIMM	Chnl 2
	4	B: 2GB DIMM	4	B: 2GB DIMM	
Chnl 3	5	F: 2GB DIMM	5	F: 2GB DIMM	Chnl 3
	6	C: 2GB DIMM	6	C: 2GB DIMM	

NOTE: Capacity references are rounded to the common Gigabyte values.

- 1GB = 1024MB
- 2GB = 2048MB
- 4GB = 4096MB
- 8GB = 8192MB

For detailed memory configuration rules and guidelines, please use the Online DDR3 Memory Configuration Tool:
http://www.hp.com/go/ddr3memory-configurator

Memory

Following are memory options available from HP:

Registered DIMMs (RDIMMs)	
HP 2GB 2Rx8 PC3-10600R-9 Kit	500656-B21
HP 4GB 2Rx4 PC3-10600R-9 Kit	500658-B21
HP 4GB 4Rx8 PC3-8500R-7 LP Kit	500660-B21
Unbuffered DIMMs (UDIMMs)	
HP 1GB 1Rx8 PC3-10600E-9 Kit	500668-B21
HP 2GB 2Rx8 PC3-10600E-9 Kit	500670-B21

NOTE: All DDR3 memory option kits consist of one DIMM per kit. For detailed memory configuration rules and guidelines, please use the Online DDR3 Memory Configuration Tool: www.hp.com/go/ddr3memory-configurator.

NOTE: Kits described as LP include Low Power DIMMs. For more information on ProLiant energy efficient features, see: www.hp.com/go/proliant-energy-efficient

Non-Hot Plug SATA or Hot Plug SAS/SATA

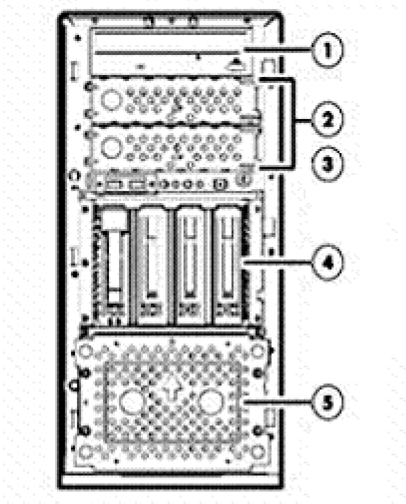

1	Optical Drive Media Bay
2	Media Bays
3	USB 2.0 ports (2)
4	Hard Drive Bays (1-4)
5	Hard Drive Bays (5-8)

Drive Support

	Quantity Supported	Position Supported	Controller
Removable Media			
SATA DVD-ROM Drive	Up to 1	1	SATA

Hard Drives

NOTE: The components of a storage subsystem (e.g. the drive, the HBA/controller, and the server backplane) should operate at the same data transfer rate or the system bandwidth will be negotiated down to an acceptable level for all components.

NOTE: Supports up to eight (8) SAS/SATA hard drives via 2nd Hot plug Hard Disk Drive cage and HP Smart Array P410 Controller.

NOTE: The 2nd hot-plug hard drive cage requires the purchase of one 750W hot plug power supply, Redundant Power Supply Enablement Kit and HP Smart Array P410 Controller (if not already part of the configuration).

SAS Hot Plug 3.5" Enterprise (ENT) Drives

	Quantity Supported	Position Supported	Controller
450GB 3G SAS 15K	Up to 8	4,5	Smart Array P212 Controller
400GB 3G SAS 10K		(Drive slots 1-8)	Smart Array P410 Controller
300GB 3G SAS 15K			Smart Array P411 Controller
146GB 3G SAS 15K			
72GB 3G SAS 15K			

SAS Non-Hot Plug 3.5" Enterprise (ENT) Drives

	Quantity Supported	Position Supported	Controller

400GB 3G SAS 10K 450GB 3G SAS 15K 300GB 3G SAS 15K 146GB 3G SAS 15K 72GB 3G SAS 15K	Up to 4	4 (Drive slots 1-8)	Smart Array P212 Controller Smart Array P410 Controller Smart Array P411 Controller

SAS Hot Plug 3.5" Midline (MDL) Drives

	Quantity Supported	Position Supported	Controller
1TB 3G SAS 7.2K 750GB 3G SAS 7.2K	Up to 8	4,5 (Drive slots 1-8)	Smart Array P212 Controller Smart Array P410 Controller Smart Array P411 Controller

NOTE: Transfer rates of drives are dependent on the maximum transfer rate supported by the HBA or Controller. Refer to the HBA or Controller technical specifications for details.

SATA Hot Plug 3.5" Entry (ETY) Drives

	Quantity Supported	Position Supported	Controller
160GB 3G SATA 7.2K	Up to 8	4,5 (Drive slots 1-8)	Smart Array P212 Controller Smart Array P410 Controller Smart Array P411 Controller

SATA Non-Hot Plug 3.5" Entry (ETY)

	Quantity Supported	Position Supported	Controller
160GB 3G SATA 15K	Up to 4	4 (Drive slots 1-4)	HP Smart Array B110i SATA RAID Controller (RAID 0,1,10)) Smart Array P212 Controller Smart Array P410 Controller Smart Array P411 Controller NOTE: Hardware Raid 5 requires a Smart Array P212/P410/P411 Controllers.

SATA Hot Plug 3.5" Midline (MDL) Drives

	Quantity Supported	Position Supported	Controller
1TB 3G SATA 7.2K 750GB 3G SATA 7.2K 500GB 3G SATA 7.2K 250GB 3G SATA 7.2K	Up to 8	4,5 (Drive slots 1-8)	Smart Array P212 Controller Smart Array P410 Controller Smart Array P411 Controller

SATA Non-Hot Plug 3.5"Midline (MDL)

	Quantity Supported	Position Supported	Controller
750GB 3G SATA15K 500GB 3G SATA 15K 250GB 3G SATA 15K	Up to 4	4 (Drive slots 1-4)	HP Smart Array B110i SATA RAID Controller (RAID 0,1,10) Smart Array P212 Controller Smart Array P410 Controller Smart Array P411 Controller NOTE: Hardware Raid 5 requires a Smart Array P212/P410/P411 Controllers.

Storage

NOTE: To support 8 drives, the purchase of the optional 2nd hot plug drive cage, 750W Redundant Power Supply, Redundant Power Supply Enablement Kit and HP Smart Array P410 Controller (if not already part of the configuration) are required.

Maximum Storage Capacity - SAS Models	
Internal	8.0TB (8 x 1TB SAS hard drives)
Total	8.0TB (8 x 1TB SAS hard drives)
Maximum Storage Capacity - SATA Models	
Internal	8.0TB (8 x 1TB SATA drives)
Total	8.0TB (8 x 1TB SATA drives)

Tape and Disk-Based Backup

NOTE: For a complete listing of compatible tape and disk-based backup offerings, please visit: www.hp.com/go/connect.

	Position Supported	Controller	Controller/HBA Option Kit Part Number
Internal USB Tape Drives DAT 40 USB DAT 72 USB DAT 160 USB	2	USB 2.0 port	N/A
External USB Tape Drives DAT 40 USB DAT 72 USB DAT 160 USB	External	USB 2.0 port	N/A
Internal SCSI Tape Drives DAT 40 DAT 72 DAT 160	2	HP SC11Xe Host Bus Adapter	412911-B21
External SCSI Tape Drives DAT 40 DAT 72 DAT 160	External	HP SC11Xe Host Bus Adapter	412911-B21
Internal SAS Tape Drives LTO-2 Ultrium 448 SAS LTO-3 Ultrium 920 SAS	2	HP SC44Ge Host Bus Adapter	416096-B21
External SAS Tape Drives LTO-2 Ultrium 448 SAS LTO-3 Ultrium 920 SAS	External	HP SC44Ge Host Bus Adapter	416096-B21

HP StorageWorks D2D Backup Systems D2D120 D2D130 D2D2504i	External	Embedded Network Controller	N/A
HP StorageWorks Removable Disk Backup System, Internal RDX160 RDX320 RDX500	2	USB 2.0 port	N/A

Power Specifications

460W PSU Part Number	500447-B21					
Operational Input Voltage Range (Vrms)	90 to 135 and 180 to 264 V ac full ranging					
Frequency Range (Nominal) (Hz)	47 to 66 Hz					
Nominal Input Voltage (Vrms)	100	115	208	220	230	240
Max Rated Output Wattage Rating	460	460	460	460	460	460
Nominal Input Current (A rms)	10	10	5	5	5	5
Max Rated Input Wattage Rating (Watts)	760	760	700	700	700	700
Max. Rated VA (Volt-Amp)	850	850	830	830	830	830
Efficiency (%)	65	65	65	65	65	65
Power Factor	0.9	0.9	0.9	0.9	0.9	0.9
Leakage Current (mA)	3.5mA	3.5mA	3.5mA	3.5mA	3.5mA	3.5mA
Maximum Inrush Current (A peak)	450	450	450	450	450	450
Maximum Inrush Current duration (mS)						

750W PSU Part Number (optional)	512327-B21					
HP RPS Enablement Kit Part Number	508544-B21					
Operational Input Voltage Range (Vrms)	90 to 135 and 180 to 264 V ac full ranging					
Frequency Range (Nominal) (Hz)	47 to 66 Hz					
Nominal Input Voltage (Vrms)	100	115	208	220	230	240
Max Rated Output Wattage Rating	750	750	750	750	750	750
Nominal Input Current (A rms)	10	10	5	5	5	5
Max Rated Input Wattage Rating (Watts)	940	940	900	900	900	900
Max. Rated VA (Volt-Amp)	1000	1000	1000	1000	1000	1000
Efficiency (%)	83	83	88	88	88	88
Power Factor	0.9	0.9	0.9	0.9	0.9	0.9
Leakage Current (mA)	3.5mA	3.5mA	3.5mA	3.5mA	3.5mA	3.5mA
Maximum Inrush Current (A peak)	450	450	450	450	450	450
Maximum Inrush Current duration (mS)						

	Power**
HP ProLiant ML150 G6 Fully Configured	(see**)
Fully Loaded System Input Wattage (W)	567W (595W)
Fully Loaded System Input Current (A rms)	4.78A (5.1A) @ 115V, 2.38A (2.55A) @ 230V
Fully Loaded System Thermal (BTU- Hr)r)	1794 BTU/526W (1933BTU/595W)
Fully Loaded System VA (Volt-Amp)	568.1 (601)
System Leakage with all power supplies loaded (mA)	0.7mA (1.25mA)
System Inrush Current with all power supplies loaded (A)	50A (37.6A)
Power cord requirements	Nema 5-15P to IEC320-C13
	IEC320-C13 to IEC320-C14
**Power shown is for a fully configured system consisting of:	
(2) CPUs up to 80W (95W), 2.4G (2.93G) (12) 2GB UDIMMs or 10 2GB RDIMMs (12pc 4G RDIMM) (4) HDDs SAS (8* HDDs SAS) (2) DVD-ROMs (3) x8 PCI-E (1) x16 PCI-E (1) PCI 32 3.3V (1) 460 watts power supply (750W power supply)	

Power Cords (13 Cord Sets)	
	Power Cord Part Number
	121565-001

System Unit	Dimensions (WxHxD)	7.87 x 16.81 x 24.13 in (200 x 427 x 613 mm) (W/O foot stand)	
	Weight (approximate)	Maximum: (All hard drives, power supplies and processors installed)	30 kg
		Minimum: (One hard drive, power supply and processor installed)	16Kg
	Input Requirements (per power supply)	Range Input Voltage	90 to 135 VAC 180 to 265 VAC
		Normal Line Voltage	100 to 127 VAC 200 to 240 VAC
		Rated Input Current	load 10A at 100 to 127 VAC 5A at 200 to 240 VAC
		Rated Input Frequency	47 to 66 Hz
		Rated Input Power (optional 750W RPS)	760 W Max (940W) Max
	BTU Rating	Maximum (optional 750W RPS)	1814 BTU (2243) BTU
	Power Specifications	To review typical power ratings use the Power Advisor which is available via the online tool located at URL: www.hp.com/go/proliant-energy-efficient	
	Power Supply Output Power (per power supply)	Rated Steady-State Power	460W (750W) at 100 VAC for system 460W (750W) at 200 VAC
		Maximum Peak Power	460W (750W) at 100 VAC 460W (750W) at 200 VAC
	System Inlet Temperature	Operating	50° to 95° F (10° to 35° C) at sea level with an altitude derating of 1.8°F per 1,000 ft (1.0° C per every 305 m) above seal level to a maximum of 10,000 ft (3050 m) no direct sustained sunlight . Maximum rate of change is 18°F/hr (10°C/hr). The upper limit may be limited by the type and number of options installed. System performance may be reduced if operating with a fan fault or above 86°F (30°C).
		Non-Operating	-40° to 140° F (-30° to 60° C)
	Relative Humidity (non-condensing)	Operating	10% to 90% relative humidity (Rh), 82.4°F (28°C) maximum wet bulb temperature, non-condensing.
		Non-operating**	10% to 95% relative humidity (Rh), 101.7°F (38.7°C) maximum wet bulb temperature, non-condensing.
	Altitude	Operating	10,000 ft (3000m). Maximum allowable altitude change rate is 1°C per 300m.
		Non-Operating	30,000 ft (9144m). Maximum allowable altitude change rate is 1°C per 300m.

Acoustic Noise	Listed are the declared A-Weighted sound power levels (LWad) and declared average bystander position A-Weighted sound pressure levels (LpAm) when the product is operating in a 23°C ambient environment. Noise emissions were measured in accordance with ISO 7779 (ECMA 74) and declared in accordance with ISO 9296 9ECMA 109).	
	Idle (Fixed Disk Drives Spinning)	
	L WAd (BELS)	460W non-redundant: 5.4 B 460W redundant: 5.5 B 750W non-redundant: 5.6 B 750W redundant: 5.5 B
	L-pAm	460W non-redundant: 36.8 dBA 460W redundant: 37.4 dBA 750W non-redundant: 36.5 dBA 750W redundant: 36.2 dBA
	Operating (Random Seeks to Fixed Disks)	
	L WAd (BELS)	460W non-redundant: 5.5 B 460W redundant: 5.6 B 750W non-redundant: 6.0 B 750W redundant: 5.7 B
	L-pAM	460W non-redundant: 37.4 dBA 460W redundant: 37.1 dBA 750W non-redundant: 40.6 dBA 750W redundant: 39.1 dBA
Emissions Classification (EMC)	FCC Rating	Class B
	Normative Standards	CISPR 22; EN55022; EN55024; 47 CFR, FCC Rules and Regulations Part 15 Subpart B;VCCI Class B ITE; ICES-003; CNS13438; GB9254; K22;K24; EN 61000-3-2; EN 61000-3-3.
	NOTE: Product conformance to cited product specifications is based on sample (type) testing, evaluation, or assessment. This product or family of products is eligible to bear the appropriate compliance logos and statements.	

HP Half-Height SATA DVD-ROM Optical Drive	Disk	Applicable Disk	CD-ROM, CD-XA, CD-DA (Mode 1, Mode 2, Form 1 and 2)
			Photo CD (Single and Multi-session)
			Mixed Mode (Audio and Data combined)
			CD-R, CD-RW, DVD-ROM, DVD+R, DVD+RW
		Capacity	4.7 GB (DVD-5)
			8.54 GB (DVD-9)
	Block Size	DVD Media	2,048 bytes
	Interface	SATA	1.56Gb/s
	Access Times (typical)	Random	<140 ms
		Full-Stroke	<250 ms
	Data Transfer Rate	Sustained	8100 to 21600 KB/s (6X to 16X)
	Cache Buffer	128 KB	
	Start-up Time (typical)	< 7 seconds	
	Stop Time	< 4 seconds	
	Laser Parameters	Type	Semiconductor Laser GaA1As
		Wave Length	780 ± 25 nm
	Operating Conditions	Temperature	41° to 113° F (5° to 45° C)
		Humidity	10% to 90%
	Dimensions	(HxWxD, maximum)	1.7 x 5.85 x 8.11 in (4.49 x 15.0 x 20.3 cm)
		Weight	2.64 lb (1.2 kg)

Smart Array P410 Controller	Dimensions (not including bracket)	Low Profile PCIe Form Factor 19.05 cm x 24.13 cm x 5.72cm (7.5 in x 9.5 in x 2.25 in)
	Disk Drive and Enclosure Interface	3G SAS (Serial Attached SCSI) 1.5G SATA (Serial ATA)
	SAS Connectors	x8 3G SAS provides 2.4GB/s maximum bandwidth
	Cache Memory Speed	DDR2-533MHz with 40 or 72-bit wide bus provides up to 4.2 GB/s maximum bandwidth.
	Server Interface	x8 2.5G PCIe 2.0 provides 2GB/s maximum bandwidth
	SAS Speed	x8 3G SAS provides 2.4GB/s maximum bandwidth
	Logical Drives Supported	Up to 32 logical drives
	Host Memory Addressing	64-bit, supporting greater than 4GB server memory space
	RAID Support	RAID 6, 6+0 (Advanced Data Guarding) NOTE: The minimum of 256 MB cache, battery kit, and Smart Array Advanced Pack License Key upgrade is required to enable RAID 6, 6+0 RAID 5, 5+0 (Distributed Data Guarding) NOTE: The 256MB upgrade is required to enable RAID 5 support on the Smart Array P410i. RAID 5+0 is available with the addition of the optional Battery kit upgrade RAID 1+0 (Striping & Mirroring) RAID 0 (Striping)

Embedded HP NC107i PCI Express Gigabit Server Adapter (Embedded)	Network Interface	Integrated 10/100/1000BASE-T Transceiver Combines a triple-speed IEEE 802.3TM - Compliant Media Access Controller (MAC) with a triple-speed Ethernet transceiver.	
	Data Transfer Method	Compliant to x1 PCIe Specification	
	Network Transfer Rate	10Base-T (Half-Duplex)	10 Mb/s
		10Base-T (Full-Duplex)	20 Mb/s
		100Base-TX (Half-Duplex)	100 Mb/s
		100Base-TX (Full-Duplex)	200 Mb/s
		1000Base-TX (Half and Full-Duplex)	2000Mb/s
	Connector	RJ-45 connector	
	Cable Support	Performs all the physical layer functions for 10BASE-T, 100BASE-T, and 1000BASE-T Ethernet on standard Category 5 UTP	
HP Smart Array B110i SATA RAID Controller (RAID 0,1,10)	Dimensions	N/A (embedded) ships standard	
	Disk Drive and Enclosure Protocol Support	3.0 Gbps SATA	
	Architecture	64-bit	
	SAS Connectors	4 internal x1 SATA connectors	
	Software Upgradeable Firmware	Yes	
	Maximum Capacity	2TB	
	Memory Addressing	6GB (maximum)	
	Logical Drives Supported	2 (maximum)	
	RAID Support	RAID 1 (Mirroring) RAID 0 (Striping) RAID 10	
Environment-friendly Products and Approach	End-of-life Management and Recycling	Hewlett-Packard offers end-of-life HP product return, trade-in, and recycling programs in many geographic areas. For trade-in information, please go to: http://www.hp.com/go/green. To recycle your product, please go to: http://www.hp.com/go/green or contact your nearest HP sales office. Products returned to HP will be recycled, recovered or disposed of in a responsible manner. The EU WEEE directive (2002/95/EC) requires manufacturers to provide treatment information for each product type for use by treatment facilities. This information (product disassembly instructions) is posted on the Hewlett Packard web site at: http://www.hp.com/go/green. These instructions may be used by recyclers and other WEEE treatment facilities as well as HP OEM customers who integrate and re-sell HP equipment.	

© Copyright 2009 Hewlett-Packard Development Company, L.P.

The information contained herein is subject to change without notice.

Microsoft and Windows NT are US registered trademarks of Microsoft Corporation. Intel, the Intel logo, Xeon and Xeon Inside are trademarks of Intel Corporation in the U.S. and other countries.

The only warranties for HP products and services are set forth in the express warranty statements accompanying such products and services. Nothing herein should be construed as constituting an additional warranty. HP shall not be liable for technical or editorial errors or omissions contained herein.

For hard drives, 1GB = 1 billion bytes. Actual formatted capacity is less.