ActivBoard 300 PRO Fixed System

INTERACTIVE WHITEBOARD SYSTEM

Product Specifications

ActivBoard 300 Pro Fixed with PRM-30a or PRM-35 projector

ActivBoard 300 Pro Fixed with EST-P1 projector

THIS DOCUMENT CONTAINS SPECIFICATIONS FOR

ActivBoard
Fixed Frame
Projector

DESCRIPTION

The ActivBoard 300 Pro with Dual-User capability is available in 78", 87" and 95" versions with integrated slim-line speakers and amplifier, ActivInspire Professional Edition and Promethean ActivOffice. The Fixed System includes a fixed wall mount and choice of Extreme Short Throw or Short Throw projector.

SYSTEM OVERVIEW

Installation	The installation of this product should be completed by a Promethean Certified Installer. Please visit www.PrometheanWorld.com/ActivCare/installationtc. Components supplied and minimum specifications stated have been tested and are required for optimal performance. Use of components not supplied by Promethean or not meeting minimum specifications may impact performance and affect warranty. Contact your Promethean partner or visit www.PrometheanKB.com for more information
Warranty	For Promethean Warranty Information please visit: www.PrometheanWorld.com/ActivCare
Support	Online Support for all Promethean Products available from: www.PrometheanKB.com
Complete System Weight (approx.)	**ActivBoard 378 Pro including;** PRM-30a Projector 64.4kg (141.8lb) PRM-35 Projector 61.4kg (135.2lb) **ActivBoard 387 Pro including;** PRM-30a Projector 68.4kg (150.6lb) PRM-35 Projector 65.4kg (144lb) **ActivBoard 395 Pro including;** PRM-30a Projector 71.4kg (157.2lb) PRM-35 Projector 68.4kg (150.6lb) **ActivBoard 378 Pro including:** EST-P1 Projector 64kg (140.9lb) **ActivBoard 387 Pro including;** EST-P1 Projector 68kg (149.7lb) **ActivBoard 395 Pro including;** EST-P1 Projector 71kg (156.3lb)

ActivBoard Systems/Boards SS 11/11 V2.0 US

©2011 Promethean Limited. All rights reserved. Promethean Ltd. is owner of a number of trademarks in several jurisdictions across the world. Any third-party product and company names are mentioned for identification purposes only and may be trademarks of their respective owners. †Applicable Terms and Conditions for warranty and support available at www.PrometheanWorld.com/ActivCare. All dimensions +/- 5mm (0.2in). All weights +/- 0.9kg (2lb). Product Specifications are subject to change without notice. www.PrometheanWorld.com

Promethean

ActivBoard 300 PRO Fixed System

INTERACTIVE WHITEBOARD SYSTEM

Product Specifications

UPGRADE AND ACCESSORY OPTIONS

Wireless Upgrade Pack 300	Allows the ActivBoard 300 Pro to connect to the computer wirelessly; includes an ActivHub (2.4 GHz), PSU (Power Supply Unit) and Quick Start Guide
Cable Wall Box	Connectivity box with inputs for 2 x fully wired VGA (to support VESA DDC) plus 3.5mm stereo jack audio inputs, USB-B input (for ActivBoard), S-Video, composite video plus auxiliary audio jack inputs, Cat 5e Ethernet input. Allows additional flexibility during installation, where the computer is located further away from the System
ActivWand 50	Wireless, battery-free and extended reach input device for the ActivBoard – 540mm (21.2in) in length; "left click", cursor and hover, just like a mouse
Dry Erase Whiteboard	Optional dry erase whiteboard, can use 1 or 2 dry erase whiteboards per System
ActivBoard System Shelf	Storage for 1 laptop, with a maximum size of a standard 43cm (17in) laptop. Lockable System Shelf also available as an option

TECHNICAL DRAWING

PRM-30a

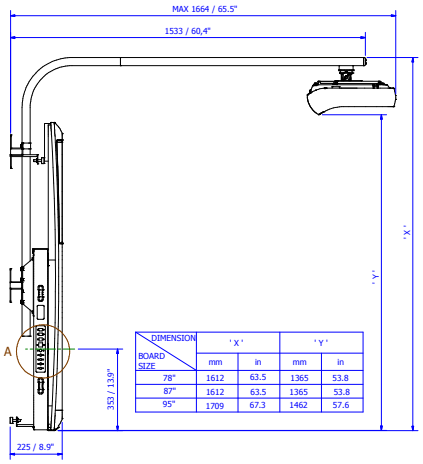

DIMENSION / BOARD SIZE	'X' mm	'X' in	'Y' mm	'Y' in
78"	1612	63.5	1365	53.8
87"	1612	63.5	1365	53.8
95"	1709	67.3	1462	57.6

PRM-35

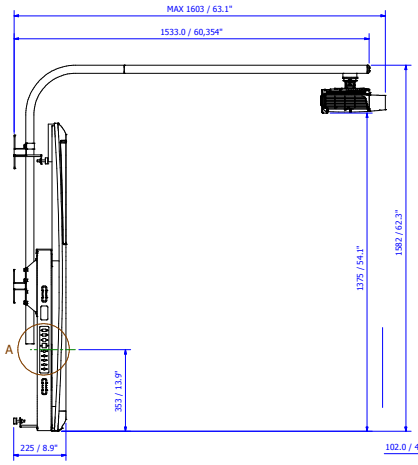

EST-P1

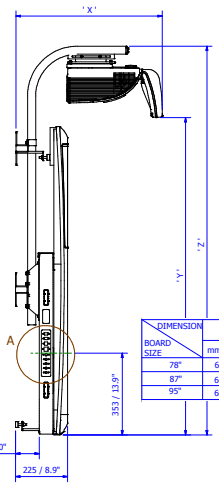

DIMENSION / BOARD SIZE	'X' mm ±10	'X' in ±0.4	'Y' mm +10 -30	'Y' in +0.4 -1.2	'Z' mm	'Z' in
78"	662	26.1	1400	55.1	1709	67.3
87"	642	25.3	1370	53.9	1679	66.1
95"	682	26.9	1400	55.1	1709	67.3

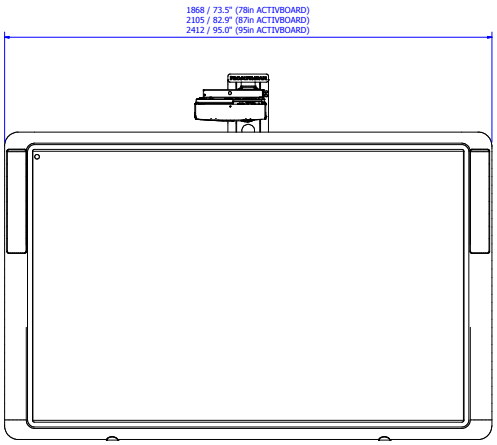

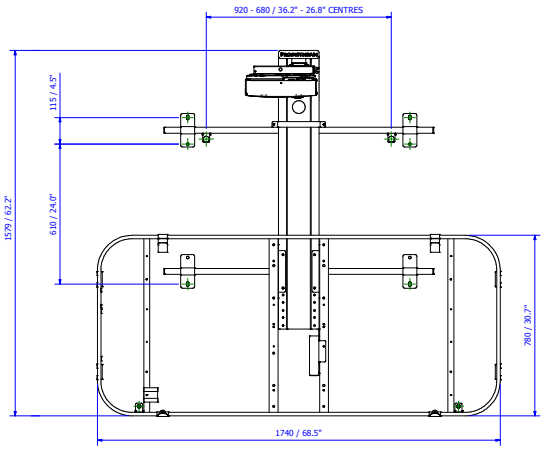

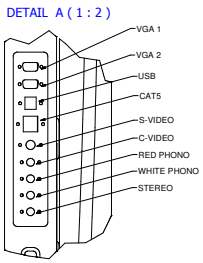

ActivBoard Systems/Boards SS 11/11 V2.0 US

©2011 Promethean Limited. All rights reserved. Promethean Ltd. is owner of a number of trademarks in several jurisdictions across the world. Any third-party product and company names are mentioned for identification purposes only and may be trademarks of their respective owners. †Applicable Terms and Conditions for warranty and support available at www.PrometheanWorld.com/ActivCare. All dimensions +/- 5mm (0.2in). All weights +/- 0.9kg (2lb). Product Specifications are subject to change without notice. www.PrometheanWorld.com

Promethean

ActivBoard 300 PRO

INTERACTIVE WHITEBOARD

Product Specifications

ACTIVBOARD GENERAL SPECIFICATIONS

Internal Resolution	2730 points (lines) per inch
Output Resolution	200 points (lines) per inch
Tracking Rate	200 inches per second providing a fast response to pen commands
Output Rate	120 coordinate pairs per second
User Input	Cordless battery-free pen incorporating tip switch and side switch for full mouse functionality (ActivPen)
Digitizing Technology	Passive Electromagnetic
Power Requirement	Mains Powered; 18V Power Supply Unit
Connection to Computer	USB 2.0, 1 x 5m USB data cable supplied
Screen Surface	Low Glare Melamine
Certifications	UL, CE, FCC
Operating Temperature	0°C to +50°C (14°F to 122°F)
Storage Temperature	-20°C to +70°C (-4°F to 158°F)
Storage Humidity	0% to 90% (non-condensing)
Dual User Functionality	2 Instructor and 2 Participant ActivPens included
Integrated USB Sound	Two integrated slim-line speakers and amplifier (with controls, inputs and outputs)
Packed Contents List	ActivBoard, 2 ActivPens (Instructor), 2 ActivPens (Participant), 1 Amp PSU, Wall Mounting Brackets, Installation Guide, Access to ActivInspire Professional Edition and Promethean ActivOffice via download (ActivInspire Professional Edition is also available on DVD on request)

INTEGRATED USB SOUND SPECIFICATIONS

Amplifier Power Output	20W per channel RMS (<1% distortion)
Controls	Volume, Bass, Treble, on/off
Amplifier Frequency Response	40Hz to 18kHz +/-3dB (at 1W)
USB Sound	USB Sound supported for Minimum System Requirements stated
Connectivity – Inputs (4)	Stereo PC, Stereo CD/DVD, Mono Auxiliary, Microphone to PC
Connectivity – Outputs (2)	2 Stereo
Power Requirement	18V 3.3 Amp

ActivBoard Systems/Boards SS 11/11 V2.0 US

©2011 Promethean Limited. All rights reserved. Promethean Ltd. is owner of a number of trademarks in several jurisdictions across the world. Any third-party product and company names are mentioned for identification purposes only and may be trademarks of their respective owners. †Applicable Terms and Conditions for warranty and support available at www.PrometheanWorld.com/ActivCare. All dimensions +/- 5mm (0.2in). All weights +/- 0.9kg (2lb). Product Specifications are subject to change without notice. www.PrometheanWorld.com

Promethean

ActivBoard 300 PRO

INTERACTIVE WHITEBOARD

Product Specifications

ACTIVBOARD SPECIFICATIONS BY MODEL

Model	ActivBoard 378 Pro	ActivBoard 387 Pro	ActivBoard 395 Pro
ActivBoard Size	78in	87in	95in
Resolution	12800 x 9200	14600 x 9200	17200 x 9200
Screen Formats	4:3	16:10	16:9
Overall Dimensions	1868mm x 1329mm (73.5in x 52.3in)	2105mm x 1329mm (82.9in x 52.3in)	2412mm x 1329mm (95in x 52in)
Active Area Dimensions	1628mm x 1175mm (64in x 46in)	1865mm x 1175mm (73in x 46in)	2172mm x 1175mm (86in x 46in)
Active Area Diagonal	2000mm (78.7in)	2196mm (86.5in)	2462mm (96.9in)
Actual Image Diagonal	1958mm (77.1in)	2193mm (86.4in)	2397mm (94.4in)
Board Weight	28kg (61.7lb)	31kg (68.3lb)	35kg (77.1lb)
Packed Weight	43kg (94.7lb)	47kg (103.6lb)	52kg (114.6lb)
Packed Dimensions	2025mm x 1500mm x 110mm (79.9in x 59in x 4.3in)	2270mm x 1500mm x 110mm (89.4in x 59in x 4.3in)	2570mm x 1500mm x 110mm (101.1in x 59in x 4.3in)

MINIMUM SYSTEM REQUIREMENTS

Operating Systems	Windows XP SP2 and above (XP/Vista/7); Mac OSX 10.4.11 – 10.6.1 (Tiger/Leopard/Snow Leopard); Linux Ubuntu 9.04, 9.10; Debian
PC	Pentium 4 – 1 GHz processor (800MHz for Vista), 512 MB of RAM, 1024x768 resolution, 1.5 GB of free disk space
Mac	Macintosh Intel Processors (Universal Binary), 512 MB of RAM, 1024x768 resolution, 3.0 GB of free disk space

ActivBoard Systems/Boards SS 11/11 V2.0 US

©2011 Promethean Limited. All rights reserved. Promethean Ltd. is owner of a number of trademarks in several jurisdictions across the world. Any third-party product and company names are mentioned for identification purposes only and may be trademarks of their respective owners. †Applicable Terms and Conditions for warranty and support available at www.PrometheanWorld.com/ActivCare. All dimensions +/- 5mm (0.2in). All weights +/- 0.9kg (2lb). Product Specifications are subject to change without notice. www.PrometheanWorld.com

Promethean

FIXED FRAME SPECIFICATIONS

Projector Type	Short Throw	Extreme Short Throw
Projector Mount	Aluminum arm, extends 1605mm (63in) from the wall	Aluminum arm, extends 550mm (21.7in) from the wall
Integrated Power Management	For ActivBoard and projector	For ActivBoard and projector
Frame Weight (approx.)	Frame only: 28.7kg (63.3lb) excl. board, projector and cabling	Frame only: 25kg (56.7lb) excl. board, projector and cabling
Connectivity Panel	Connectivity panel with inputs for 2 x fully wired VGA (to support VESA DDC) plus 3.5mm stereo jack audio inputs, USB-B input (for ActivBoard), S-Video, composite video plus auxiliary audio jack inputs, Cat 5e Ethernet input. Connectivity panel can be mounted on the left or right-hand side of the frame.	Connectivity panel with inputs for 2 x fully wired VGA (to support VESA DDC) plus 3.5mm stereo jack audio inputs, USB-B input (for ActivBoard), S-Video, composite video plus auxiliary audio jack inputs, Cat 5e Ethernet input. Connectivity panel can be mounted on the left or right-hand side of the frame.
Cables	Cable assembly includes; 2 x 4m (13.1ft) VGA panel mount (fully wired to support VESA DDC), 4m (13.1ft) S-Video panel mount, 4m (13.1ft) composite video panel mount, 4m (13.1ft) Ethernet panel mount, 2.8m (9.2ft) USB cable, 2.5m (8.2ft) right angle stereo jack to panel mount jack socket, 2.5m (8.2ft) right angle stereo jack to panel mount phono pair, for PC audio input. To connect the computer to the face plate: 2m (6.6ft) USB patch cable; and a 2m (6.6ft) VGA cable provided in the projector box	Cable assembly includes; 2 x 4m (13.1ft) VGA panel mount (fully wired to support VESA DDC), 4m (13.1ft) S-Video panel mount, 4m (13.1ft) composite video panel mount, 4m (13.1ft) Ethernet panelmount, 2.8m (9.2ft) USB cable, 2.5m (8.2ft) right angle stereo jack to panel mount jack socket, 2.5m (8.2ft) right angle stereo jack to panel mount phono pair, for PC audio input. To connect the computer to the face plate: 2m (6.6ft) USB patch cable; and a 2m (6.6ft) VGA cable provided in the projector box
Pack Weight & Dimensions	**Box 1 of 2:** approx. 20kg (44lb) Dimensions: 217mm x 1427mm x 467mm (8.54in x 56.18in x 18.39in) Contents: Boom **Box 2 of 2:** approx. 11.6kg (25.5lb) Dimensions: 128mm x 1782mm x 822mm (5.04in x 70.16in x 32.36in) Contents: Frame	**Box 1 of 2:** approx. 15.7kg (34.5lb) Dimensions: 217mm x 1427mm x 467mm (8.54in x 56.18in x 18.39in) Contents: Boom **Box 2 of 2:** approx. 11.6kg (25.5lb) Dimensions: 128mm x 1782mm x 822mm (5.04in x 70.16in x 32.36in) Contents: Frame

ActivBoard Systems/Boards SS 11/11 V2.0 US

©2011 Promethean Limited. All rights reserved. Promethean Ltd. is owner of a number of trademarks in several jurisdictions across the world. Any third-party product and company names are mentioned for identification purposes only and may be trademarks of their respective owners. †Applicable Terms and Conditions for warranty and support available at www.PrometheanWorld.com/ActivCare. All dimensions +/- 5mm (0.2in). All weights +/- 0.9kg (2lb). Product Specifications are subject to change without notice. www.PrometheanWorld.com

Promethean

PROJECTOR SPECIFICATIONS

Model	**EST-P1** (DLP)	**PRM-35** (DLP)	**PRM-30a** (LCD)
Native Resolution	WXGA (1280 x 800)	WXGA (1280 x 800)	WXGA (1280 x 800)
Compressed Resolution	up to 1080i	up to 1080i	up to 1080i
Typical Colors	16.77 million colors	16.77 million colors	16.77 million colors
Brightness (ANSI lumens)	2200 ANSI (normal) 2500 ANSI (high)	2100 ANSI (normal) 2500 ANSI (high)	1900 ANSI (normal) 2500 ANSI (high)
Contrast Ratio	2000:1	2000:1	500:1
Noise Level	27dB (normal) 31dB (high brightness mode)	32dB (normal) 36dB (high brightness mode)	29dB (normal) 36dB (high brightness mode)
Dimensions (w x d x h)	354mm x 319mm x 157mm (13.9in x 12.6in x 6.1in) not including lens 354mm x 411mm x 219mm (13.9in x 16.1in x 8.6in) including lens	306mm x 275mm x 97mm (12in x 3.8in x 10.1in)	382mm x 430mm x 129mm (15in x 16.9in x 5in)
Weight	9kg (19.8lb)	2.7kg (6lb)	5.7kg (12.5lb)
Aspect Ratio	16:10 (native), 4:3, 16:9	16:10 (native), 4:3, 16:9	16:10 (native), 4:3, 16:9
Power Consumption	290W (<1W standby)	230W (<1W standby)	317W (<0.8W standby)
Device Type	DLP Technology	DLP Technology	LCD Technology
Focus	Manual Focus	Manual Focus	Manual Focus
Zoom	N/A	Digital Zoom	Digital Zoom
Focal Length	F=2.4	F=2.86	Fixed
Projection Distance	0.39m ~ 0.56m (15in ~ 22in)	0.54m ~ 1.22m (21.3in ~ 48in)	0.54m ~ 1.22m (21.3in ~ 48in)
Projection Screen Size	1.98m ~2.79m (78in ~ 110in)	1.27m ~ 2.79m (50in ~110in)	1.27m ~ 2.79m (50in ~110in)
Lamp Type	220W lamp	230W lamp	230W lamp
Lamp Life	6000hrs (normal), 4000hrs (high)	6000hrs (normal), 4000hrs (high)	4000 hrs (normal), 3000 hrs (high)
Keystone Correction	Vertical: max ±15°	Vertical: max ±15°	Vertical: max ±20°
Operating Temperature	5°C ~ 35°C (41°F ~ 95°F)	5°C ~ 35°C (41°F ~ 95°F)	5°C ~ 35°C (41°F ~ 95°F)
Power Supply Voltage	100 - 240V AC, 50/60Hz	100 ~ 240V AC, 50/60Hz	100 ~ 240V AC, 50/60Hz
Horizontal Scan Rate	15Hz ~ 90kHz	15Hz ~ 90kHz	15Hz ~ 90kHz
Vertical Scan Rate	43Hz ~ 85Hz	50Hz ~ 85Hz	50Hz ~ 85Hz

CONTINUED ON NEXT PAGE

ActivBoard Systems/Boards SS 11/11 V2.0 US

©2011 Promethean Limited. All rights reserved. Promethean Ltd. is owner of a number of trademarks in several jurisdictions across the world. Any third-party product and company names are mentioned for identification purposes only and may be trademarks of their respective owners. †Applicable Terms and Conditions for warranty and support available at www.PrometheanWorld.com/ActivCare. All dimensions +/- 5mm (0.2in). All weights +/- 0.9kg (2lb). Product Specifications are subject to change without notice. www.PrometheanWorld.com

Promethean

PROJECTOR SPECIFICATIONS (CONTINUED)

Computer Compatibility	IBM PC and Compatibles; Apple Macintosh, iMac, and VESA Standards WSXGA+ (1,680 x 1,050), WXGA+ (1,440 x 900), WXGA (1,280 x 800, 1,280 x 768), UXGA (1,600 x 1,200), SXGA+ (1,400 x 1,050), SXGA (1,280 x 1,024), XGA (1,024 x 768), SVGA (800 x 600), VGA (640 x 480)	IBM PC and Compatibles; Apple Macintosh, iMac, and VESA Standards WSXGA+ (1,680 x 1,050), WXGA+ (1,440 x 900), WXGA (1,280 x 800, 1,280 x 768), UXGA (1,600 x 1,200), SXGA+ (1,400 x 1,050), SXGA (1,280 x 1,024), XGA (1,024 x 768), SVGA (800 x 600), VGA (640 x 480)	IBM PC and Compatibles; Apple Macintosh, iMac, and VESA Standards WSXGA+ (1,680 x 1,050), WXGA+ (1,440 x 900), WXGA (1,280 x 800, 1,280 x 768), UXGA (1,600 x 1,200), SXGA+ (1,400 x 1,050), SXGA (1,280 x 1,024), XGA (1,024 x 768), SVGA (800 x 600), VGA (640 x 480)
Video Compatibility	NTSC (3.58/4.43), PAL (B/D/G/H/I/M/N), SECAM (B/D/G/K/K1/L), HDTV (720p, 1080i, 1035i), EDTV (480p, 575i), SDTV (480i, 576i)	NTSC (3.58/4.43), PAL (B/D/G/H/I/M/N), SECAM (B/D/G/K/K1/L), HDTV (720p, 1080i, 1035i), EDTV (480p, 575i), SDTV (480i, 576i)	NTSC (3.58/4.43), PAL (B/D/G/H/I/M/N), SECAM (B/D/G/K/K1/L), HDTV (720p, 1080i, 1035i), EDTV (480p, 575i), SDTV (480i, 576i)
Inputs/Outputs	D-sub 15 (RGB) x 2 D-sub 15 (Monitor out) x 1 HDMI V1.3 only for Video x 1 S-Video x 1 Composite Video (RCA) x 1 USB control x 1 Networking LAN (RJ45) x 1 RS-232C (D-sub 9) x 1	D-sub 15 (RGB) x 2 D-sub 15 (Monitor out) x 1 HDMI V.1.3 only for Video x 1 S-Video x 1 Composite Video (RCA) x 1 USB control x1 Networking LAN (RJ45) x 1 RS-232C (D-sub 9) x 1	D-sub 15 (RGB) x 1 D-sub 15 (RGB) selectable x 1 HDMI (Digital RGB) x 1 S-Video x 1 Composite Video (RCA) x 1 RCA (white/red) x 1 Networking LAN (RJ45) x 1 RS-232C (D-sub 9) x 1 Stereo mini-jack x 1
Color	Silver	Silver	Silver
Security	Kensington Lock, Security cable bar option, pin code security, remote control operated only	Kensington Lock, Security cable bar option, pin code security, remote control operated only	Kensington Lock, Security cable bar option, pin code security, remote control operated only
On-screen Menu	Arabic, Chinese (Simplified), Chinese (Traditional), Czech, Dutch, English, Finnish, French, German, Greek, Hungarian, Italian, Japanese, Korean, Norwegian, Polish, Portuguese, Russian, Spanish, Swedish, Thai, Turkish	Arabic, Chinese (Simplified), Chinese (Traditional), Czech, Dutch, English, Finnish, French, German, Greek, Hungarian, Italian, Korean, Norwegian, Polish, Portuguese, Russian, Spanish, Swedish, Turkish	Arabic, Chinese (Simplified), Chinese (Traditional), Danish, Dutch, English, Finnish, French, German, Hungarian, Italian, Japanese, Kazak, Korean, Norwegian, Polish, Portuguese, Portuguese (Brazilian), Romanian, Russian, Spanish, Swedish, Turkish
Advanced Features	Filter-less 3D Ready Crestron RoomView Express Quick Lamp Access Direct power on/off Closed Caption	Filter-less 3D Ready Crestron RoomView Express Quick Lamp Access Direct power on/off Closed Caption	Long Life Filter – 4000hrs Crestron RoomView Express Cable Management Cover Quick Lamp Access Direct power on/off Closed Caption
Packed Contents List	Projector, Power cord, computer cable (D-sub15 – D-sub15), wireless remote, owner's manual (CD - ROM & Quick Start Guide)	Projector, Power cord, computer cable (D-sub15 – D-sub15), wireless remote, owner's manual (CD - ROM & Quick Start Guide)	Projector, Power cord, computer cable (D-sub15 – D-sub15), wireless remote, owner's manual (CD - ROM & Quick Start Guide)
Pack Weights and Dimensions	**Box 1 of 1:** 13.5kg (29.7lb) Dimensions: 572mm x 496mm x 310mm (22.5in x 19.5in x 12.2in) Contents: Projector	**Box 1 of 1:** 4.9kg (10.8lb) Dimensions: 396mm x 341mm x 181mm (15.5in x 13.4in x 7.1in) Contents: Projector	**Box 1 of 1:** 9.5kg (20.9lb) Dimensions: 510mm x 470mm x 240mm (20in x 18.5in x 9.4in) Contents: Projector

ActivBoard Systems/Boards SS 11/11 V2.0 US

©2011 Promethean Limited. All rights reserved. Promethean Ltd. is owner of a number of trademarks in several jurisdictions across the world. Any third-party product and company names are mentioned for identification purposes only and may be trademarks of their respective owners. †Applicable Terms and Conditions for warranty and support available at www.PrometheanWorld.com/ActivCare. All dimensions +/- 5mm (0.2in). All weights +/- 0.9kg (2lb). Product Specifications are subject to change without notice. www.PrometheanWorld.com

Promethean